ACL Module

User manual

PUBLICATION ISSUED BY:

Via Kennedy, 24 - 10019 STRAMBINO (TO)
Tel.: +39 0125 63 68 11
Fax: +39 0125 63 68 99
e-mail: seica@seica.com
Web site: http://www.seica.com

Copyright © 2007
All rights reserved

Microsoft Windows is a registered trade mark of Microsoft Corporation

Document code: MA-VI-ACLI00EN-05

Date published: 2007- 12 - 14

Seica S.p.A. reserves the right to change technical specifications without notice.

CONTENTS

CONTENTS I
LIST OF TABLES III
LIST OF FIGURES III
ACRONYMS V
1 ACL module 1-1
2 ACL module instruments 2-1
2.1 ACL - DSP CONTROLLED ANALOG INTRUMENTS 2-2
2.1.1 Voltage/current generator DC/AC 4 quadrants - DRA 2-2
2.1.2 Voltage generator DC/AC 4 quadrants - DRB 2-3
2.1.3 High frequency output of the DRB (it can be used alternative to the DRB output) 2-3
2.1.4 DRC DC High Voltage Driver generator (4 quadrants) 2-4
2.1.5 DC/AC Voltage meter 2-4
2.1.6 DC/AC Current meter (it can work alternatively as a secondary voltage meter) 2-4
2.1.7 Counter 2-6
2.1.8 Pull-Up/Pull-Down resistors 2-6
2.1.9 Four digital bi-directional channel with three state output 2-6
2.1.10 Other functions implemented on the board 2-6
3 Software Instruments management 3-1
3.1 Syntax in instrument software management 3-2
3.2 Primary driver - DRA - 3-4
3.2.1 ~SET DRA 3-4
3.2.2 ~CLEAR DRA 3-7
3.2.2.1 Example of use of DRA instrument 3-8
3.3 Secondary driver - DRB - 3-10
3.3.1 ~SET DRB 3-10
3.3.2 ~CLEAR DRB 3-13
3.4 HV - DRC - driver 3-14
3.4.1 ~SET DRC 3-14
3.4.2 ~CLEAR DRC 3-14
3.5 Internal Multi Meter - IMM - 3-15
3.5.1 ~SET IMM 3-15
3.5.2 ~MEAS IMM 3-26
3.5.3 ~CLEAR IMM 3-29
3.6 SHUNT 3-30
3.6.1 ~SET SHUNT 3-30
3.7 Counter/Frequency meter/Timer - SCOUNTER - 3-31
3.7.1 ~SET SCOUNTER 3-31
3.7.2 ~MEAS COUNTER 3-35
3.7.3 ~CLEAR COUNTER 3-35
3.8 Switching/Connecting Instruments 3-35
3.8.1 ~SET MONITOR 3-35
3.8.2 ~SET AGND 3-36
3.8.3 ~CLEAR AGND 3-37
3.8.4 ~SET PULL 3-37
3.8.5 ~CLEAR PULL 3-39
3.8.6 ~SET LINE 3-39
3.8.7 ~CLEAR LINE 3-40
3.8.8 ~SET LINE_EXT 3-40
3.8.9 ~CLEAR LINE_EXT 3-40
3.9 Resources of common use present on the ACL DSP MODULE 3-41
3.9.1 ~SET WR_HW 3-41
3.9.2 ~MEAS RD_HW 3-42
3.10 Resources of common use managed by ACL DSP module 3-49
3.10.1 ~SET CHANNEL 3-50
3.10.2 ~CLEAR CHANNEL 3-52
3.10.3 ~SET POWERSCAN 3-54

3.10.4 ~CLEAR POWERSCAN 3-56
3.10.5 ~SET IOV5LOAD 3-58
3.10.6 ~CLEAR IOV5LOAD 3-59
3.10.7 ~SET IOV5LOAD_OUT_A 3-59
3.10.8 ~SET IOV5LOAD_OUT_B 3-60
3.10.9 ~SET IOV5LOAD_OUT_LOAD 3-60
3.10.10 ~MEAS IOV5LOAD_OUT_LOAD 3-60
3.10.11 ~SET IOV5LOAD_OUT_ANA 3-61
3.10.12 ~SET IOV5LOAD_OUT_OPTO 3-61
3.10.13 ~SET PWn 3-62
3.10.14 ~MEAS PWn 3-62
3.11 Digital Channels - LOGIC- 3-63
3.11.1 ~SET LOGIC_LEVEL 3-64
3.11.2 ~CLEAR LOGIC_LEVEL 3-64
3.11.3 ~SET LOGIC_MODE 3-65
3.11.4 ~CLEAR LOGIC_MODE 3-68
3.11.5 ~SET LOGIC 3-68
3.11.6 ~CLEAR LOGIC 3-70
3.11.7 ~MEAS LOGIC 3-70
3.12 Data exchange between MAIN COMPUTER and ACL DSP MODULE 3-72
3.12.1 ~SET FLASH 3-72
3.12.2 ~GET FLASH 3-73
3.12.3 ~SET RAM_EXT 3-74
3.12.4 ~GET RAM_EXT 3-75
3.13 Compound instruments 3-76
3.13.1 ~MEAS RES 3-77
3.13.2 ~MEAS CAP 3-81
3.13.3 ~MEAS IND 3-84
3.13.4 ~MEAS JUN 3-86
3.13.5 ~MEAS CONTACT 3-88
3.13.6 ~MEAS SHORT 3-89
3.13.7 ~SET GUARD 3-90
3.13.8 ~SET DISCAP 3-91
3.13.9 ~MEAS SCAMPO 3-92
4 Appendix A: List of instructions and electrical features of the main system resources 4-93
~SET DRA 4-94
~SET DRB 4-94
~SET DRC 4-94
~SET IMM 4-95
~MEAS IMM 4-96
~SET SHUNT 4-96
~SET SCOUNTER 4-96
~MEAS SCOUNTER 4-96
~SET MONITOR 4-96
~SET AGND 4-96
~SET PULL 4-96
~SET LINE 4-97
~SET LINE_EXT 4-97
~SET WR_HW 4-97
~MEAS RD_HW 4-97
~SET CHANNEL 4-97
~SET POWERSCAN 4-97
~SET IOV5LOAD 4-97
~SET IOV5LOAD_OUT_A 4-97
~SET IOV5LOAD_OUT_B 4-97
~SET IOV5LOAD_OUT_LOAD 4-97
~MEAS IOV5LOAD_OUT_LOAD 4-97
~SET IOV5LOAD_OUT_ANA 4-97
~SET IOV5LOAD_OUT_OPTO 4-97
~SET LOGIC_LEVEL 4-98

~SET LOGIC_MODE 4-98
~SET LOGIC 4-98
~MEAS LOGIC 4-98
~SET FLASH 4-98
~GET FLASH 4-98
~SET RAM_EXT 4-98
~GET RAM_EXT 4-98
~MEAS RES 4-99
~MEAS CAP 4-99
~MEAS IND 4-100
~MEAS JUN 4-100
~MEAS CONTACT 4-100
~MEAS SHORT 4-100
~SET GUA_POINT 4-100
~SET DISCAP 4-101
~MEAS SCAMPO 4-101
ACL DSP MODULE RESOURCES: main electric characteristics 4-102
IOV5LOAD MODULE RESOURCES: main electric characteristics 4-102
SYSTEM CHANNELS: main electric characteristics 4-102

LIST OF TABLES

Tab. 3-1 ACL module: syntax for constant that identify unity of measure 3-3
Tab. 4-1- ACL module: Instructions, syntax and default value 4-94

LIST OF FIGURES

Fig. 1-1 - ACL module: General Tester Data Flow 1-2
Fig. 1-2 - ACL module: Internal instruments 1-3
Fig. 2-1 - ACL module: Main Computer and ACL communication 2-1
Fig. 2-2 - ACL module: ACL module with FCMES and PODAMP options 2-7
Fig. 3-1- ACL module: Examples of DRA output 3-8
Fig. 3-2- ACL module: DRA and DRB 3-13
Fig. 3-3 - ACL module: Internal instrument MEAS_I 3-15
Fig. 3-4 - ACL module: Internal instrument MEAS_I and MEAS_I with FCMES option 3-16
Fig. 3-5 - ACL module: FCMES and PODAMP connections to internal instrument MEAS_I 3-16
Fig. 3-6 - ACL module: Data source for MEAS_V and MEAS_I buffers 3-26
Fig. 3-7 - ACL module: Custom shunt for the current measurement 3-31
Fig. 3-8 - ACL module: Internal instrument AGND 3-37
Fig. 3-9 – ACL module:Internal instrument PULL 3-38
Fig. 3-10 - ACL module: Connectors and signals 3-43
Fig. 3-11 - ACL module: Diagram of electrical output signals OC0 ÷ OC7 3-44
Fig. 3-12 - ACL module: Diagram of electrical output signals RTOIS0 ÷ RTOIS3 and JTOIS0 ÷ JTOIS1 3-45
Fig. 3-13 - ACL module: Diagram of electrical output signals FXO0 ÷ FXO3 3-46
Fig. 3-14 - ACL module: Diagram of electrical input signals RTI0÷ RTI3 3-47
Fig. 3-15 - ACL module: Diagram of electrical input signals JTI0÷ JTI3 3-47
Fig. 3-16 - ACL module: Diagram of electrical input signals FXI0÷ FXI3 3-48
Fig. 3-17 - ACL module: Analog System Bus Lines, Board Lines and Channel Boards 3-53
Fig. 3-18 - ACL module: HRELE channels board and the first four 2 lines-channels 3-57
Fig. 3-19 - ACL module: IOV5LOAD OUT_A and OUT_B 3-58
Fig. 3-20 - ACL module: IOV5LOAD: OUT_LOAD, OUT_ANA and OUT_OPTO 3-58
Fig. 3-21 - ACL module: Internal instrument Digital Channels 3-64
Fig. 3-22 - ACL module: CH3 burst from DSP-RAM Fig. 3-23 - ACL module: CH3 burst from DRA-RAM 3-68
Fig. 3-24 - ACL module: CH3 burst from CKH1 Fig. 3-25 - ACL module: CH3 burst from JTAG 3-68
Fig. 3-26 - ACL module: Component measurement and guarding 3-77

Fig. 3-27 - ACL module: MEAS CONTACT.....3-88
Fig. 3-28 - ACL module: MEAS SHORT.....3-89
Fig. 3-29 - ACL module: Capacitive Senses measure.....3-92

ACRONYMS

ADC	Analog to Digital Converter.
CPCI	Compact PCI.
DAC	Digital to Analog Converter.
DFT	Discrete Fourier Transform.
DDFS	Direct Digital Frequency Synthesis or point-skipping at constant clock-rate or simply DDS: repetitive waveform generation technique with constant frequency sample scanning. (point-skipping technique).
DDS	Direct Digital Synthesis.
DSP	Digital Signal Processing.
FGE	Functional Guided Editor.
FFT	Fast Fourier Transform: algorithm for calculation of the Discrete Fourier Transform.
GPIB	General Purpose Interface Bus, IEEE 488.
ICT	In Circuit Test: test on a component placed in a circuit with other components.
IOH	Current sent to node. (e.g.: 0 at 40 mA).
IOL	Current derived from node. (e.g.: 0 at -40 mA).
IEEE 488	Interface bus for communication with external equipment.
ENG	Interface Test Adapter: routing of signals from the inspection station channels to the board nodes. (Fixture).
IMM	Internal Multi Meter.
JTAG	Join Test Action Group: technique developed to simplify the automatic SoB test considered a standard and coded as IEEE 1149.
MIL-STD-1553	military standard that defines the electrical characteristics and serial bus protocol for data exchange.
PCI	Peripheral Component Interface. (4 peripheral slots).
PLL	Phase Locked Loop: phase controlled oscillator
PPC	Point per Clock synthesis at variable clock rate or sample buffer playback synthesis: repetitive waveform generation technique with variable frequency sample scanning. (point-per-clock technique).
PXI	PCI eXtension for instrumentation. (7 peripheral slots).
SoB	System on Board: System inserted in a board.
SoC	System on Chip: System inserted in a chip or VLSI circuit.
UUT	Unit Under Test.
VME	Versa Module Europe; Vme bus specification controlled by VSO.
VISA	Virtual Instrument Software Architecture, software architecture for communication with peripheral modules: serials, VXI and GPIB.
VLSI	Very Large Scale Integration: indicates a high level of miniaturization of an electronic component.
VXI	VME eXtension for instrumentation.
VOH	High level of driver channel in volts. (e.g.: -4 at 5.25V)
VOL	Low level of driver channel in volts. (e.g.: -4 at 5.25V)
THH	High level threshold of sensor channel in volts. (e.g.: -4 at 5.25V)
THL	Low level threshold of sensor channel in volts. (e.g.: -4 at 5.25V)

SECTION 1

1 ACL module

The ACL module is the new module containing the internal stimulus and measurement instruments used on the Seica test systems.

The internal stimulus and measurement instruments have been redesigned and optimized by increasing the accuracy of the measurement instruments and the possibility of programming the drivers. The method of measurement has been changed from ground-referenced voltage to differential voltage. Voltage/current acquisition devices are used with 14-bit resolution and extensive programmability of sampling frequency. Four bi-directional digital channels are available with programmable levels, 64 Kbit per thristate channel and output.

The instruments available with the ACL module are:

-	Two DC/200KHz synchronous arbitrary waveform generators	**DRA and DRB**
-	A high voltage ±100V DC generator	**DRC**
-	An AC/DC voltage and current meter	**IMM**
-	A Counter/Timer/Frequency meter	**SCOUNTER**
-	Four digital channels	**LOGIC**
-	Pull Up/Pull Down resistors on one line	**PULL**
-	Physical ground/Virtual ground	**GND**
-	Connection of internal/external measure line	**LINE/LINE_EXT**

The instruments are available on a software configurable 4 or 8 line measure line matrix according to the measurements performed with 3 or 6 wires. The measure lines coming from the module are connected to the eight lines of the analog bus used to perform the test on the unit under test (UUT).

The data acquired with the measurements is controlled and processed with a DSP module that also controls dialogue with the Main Computer based on fiber optics and guarantees electrical separation between the Main Computer and the instrument group. The module that controls and processes the values acquired with the measurements has a special connection that directly connects the new board to a PXI bus- based remote analog unit.

Fig. 1-1, that indicates the data flow in a general test system, shows the central position of the ACL module that interacts with almost all the system modules whereas Fig. 1-2 - ACL module: Internal instruments shows the architecture of the internal instruments on the ACL module and the method of connection with the internal measure line matrix for each instrument. The figure also indicates the way the internal line matrix is connected to the system analog measurement lines and/or with optional analog buses from PXI modules.

The following sections describe:
- the hardware characteristics of the instruments available with the ACL module
- the software management of the instruments with the instructions that can be used in the functional programs
- examples of instrument use with functional programming instructions

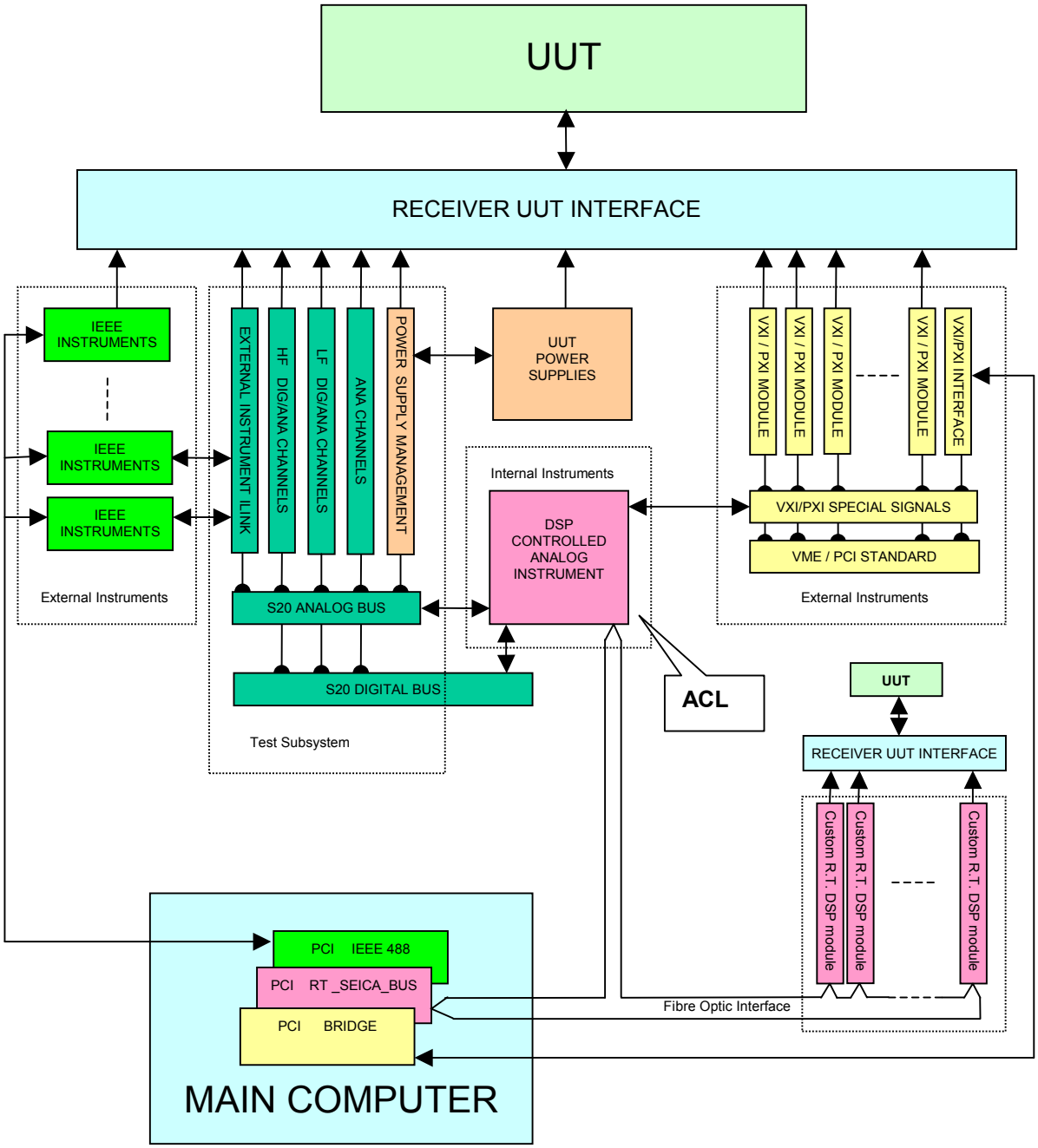

Fig. 1-1 - ACL module: General Tester Data Flow

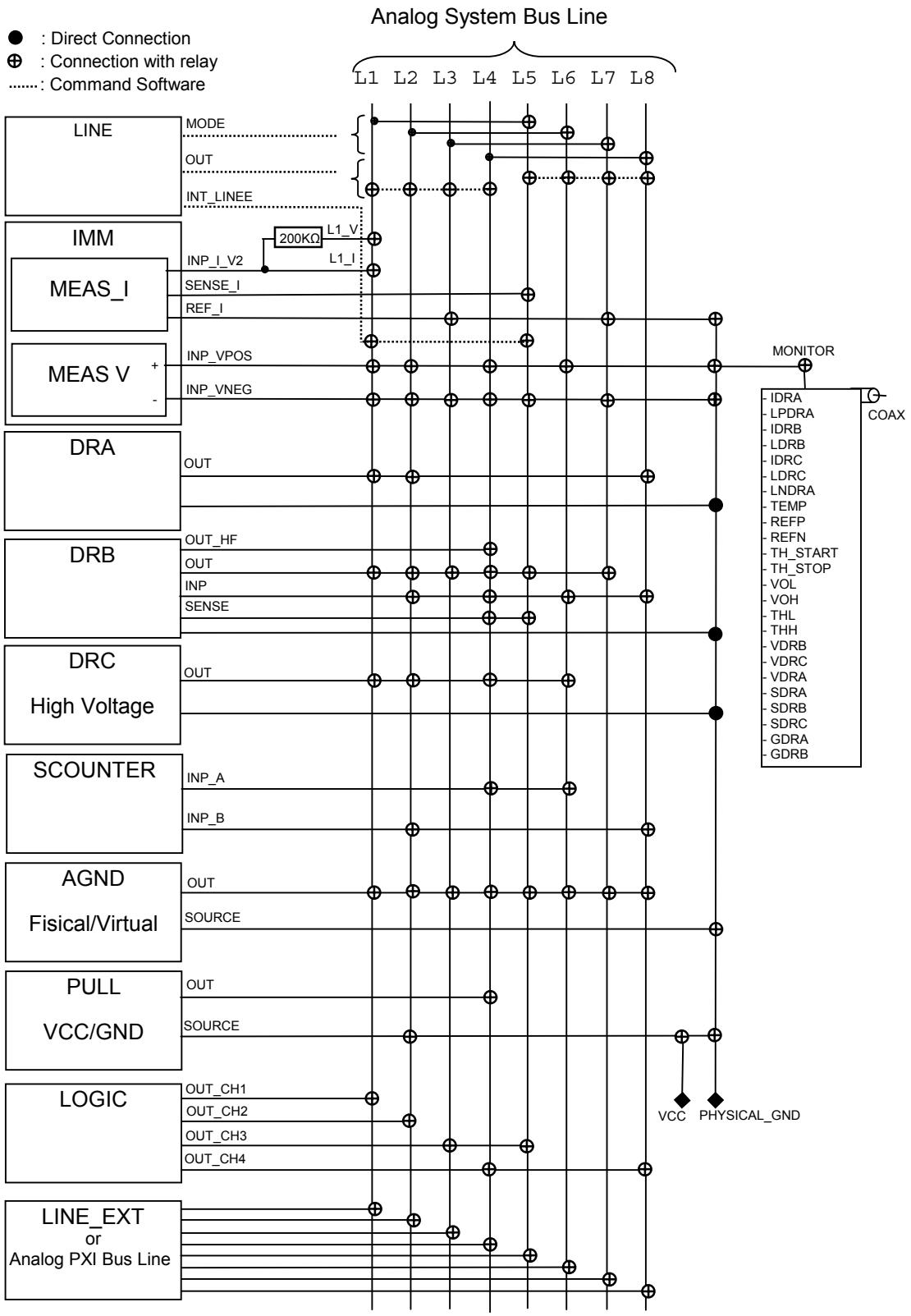

Fig. 1-2 - ACL module: Internal instruments

Section 2

2 ACL module instruments

This section describes the characteristics at Firmware and Hardware level of the instruments on the ACL module.
The ACL module is a module consisting of two boards:

COMAV is the board that dialogues on the fiber optic serial bus with the PAMOC module on the Main Computer and controls the analog/digital devices using 32 bit floating point DSP firmware.

ACLAM is the board that contains the analog/digital devices for testing instruments such as the ADC, the DAC, Power Drivers, Comparators, DDS Generators, relays for connection of instruments/lines/channels etc. …

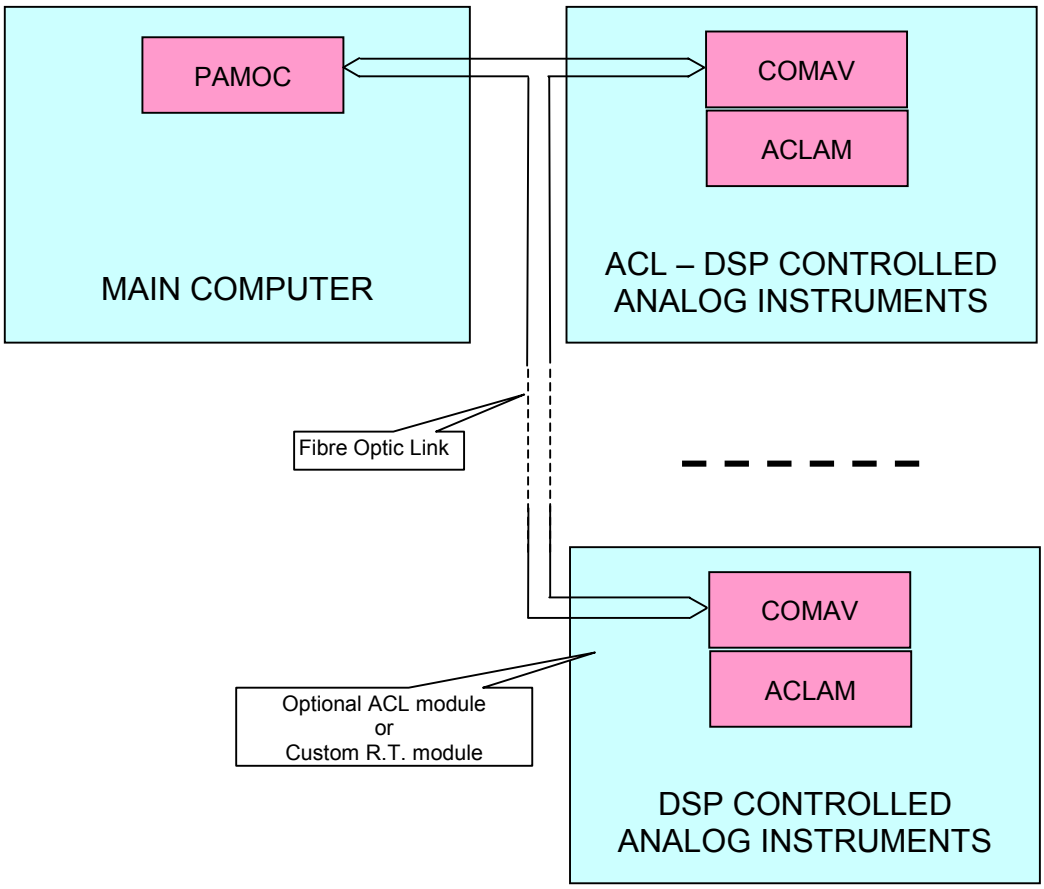

Fig. 2-1 - ACL module: Main Computer and ACL communication

2.1 ACL - DSP CONTROLLED ANALOG INTRUMENTS

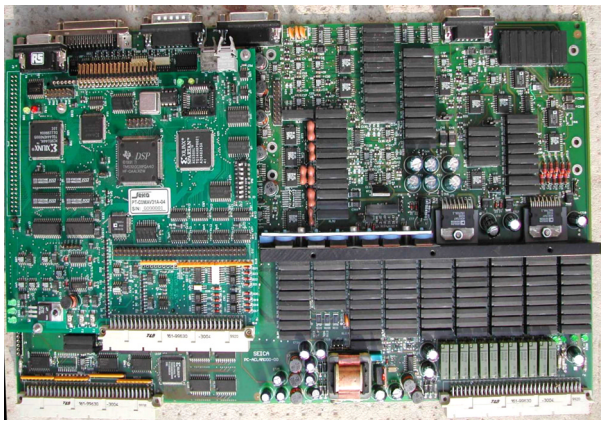

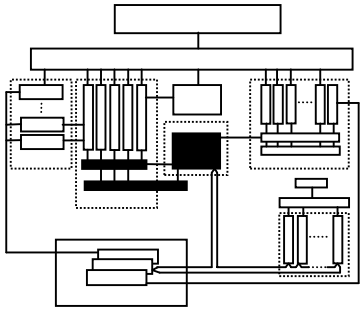

The ACL module contains the internal test instruments to execute the measurements.

2.1.1 Voltage/current generator DC/AC 4 quadrants - DRA

- DC/AC Current generator (4 quadrants) with voltage limit
- DC/AC Voltage generator (4 quadrants) with current limit

Output type:	Range	Resolution	Accuracy
Voltage:	±1V	125µV	±0,1%±1mV
	±10V	1,25mV	±0,1%±1mV
Current:	±0,5µA	62,5pA	±0,1%±1nA
	±5µA	625pA	±0,1%±5nA
	±50µA	6,25nA	±0,1%±5nA
	±500µA	62,5nA	±0,1%±50nA
	±5mA	625nA	±0,1%±500nA
	±50mA	6,25µA	±0,1%±5µA
	±500mA	62,5µA	±0,1%±50µA

- Waveform generator using DDS (Direct Digital Synthesizer) or PPC (Point Per Clock synthesis)

Output type:	Range	Resolution	Accuracy
Sine, Tri, Arbitrary:	1Hz÷200KHz	1mHz	±10V
Sine, Tri, Arbitrary:	1Hz÷400KHz	1mHz	±5V
Sine, Tri, Arbitrary:	1Hz÷600KHz	1mHz	±2V
Sine, Tri, Arbitrary:	1Hz÷1MHz	1mHz	±1V

Memory depth:	32K word
Driver Slew Rate:	10V/µS
Driver Bandwidth:	1MHz
Signal DAC:	14Bit/50MHz
Limit DAC:	10Bit/50MHz
Offset DAC:	14Bit

2.1.2 Voltage generator DC/AC 4 quadrants - DRB

- DC/AC Voltage generator (4 quadrants) with current limit

Output type:	Range	Resolution	Accuracy
Voltage:	±1V	125µV	±0,1% ±1mV
	±10V	1,25mV	±0,1% ±1mV
Current (Limit):	±500mA	62,5µA	±0,5% ±1mA

- Waveform generator using DDS (Direct Digital Synthesizer) or PPC (Point Per Clock synthesis)

Output type:	Range	Resolution	Accuracy
Sine, Tri, Arbitrary:	1Hz÷100KHz	1 mHz	±10V
Sine, Tri, Arbitrary:	1Hz÷400KHz	1 mHz	±5V
Sine, Tri, Arbitrary:	1Hz÷600KHz	1 mHz	±2V
Sine, Tri, Arbitrary:	1Hz÷1MHz	1mHz	±1V

Memory depth:	32K word
Driver Slew Rate:	10V/µS
Driver Bandwidth:	1MHz
Signal DAC:	14Bit/50MHz
Limit DAC:	10Bit/50MHz
Offset DAC:	14Bit

2.1.3 High frequency output of the DRB (it can be used alternative to the DRB output)

- Voltage generator (4 quadrants) with current limit

Output type:	Range	Resolution	Accuracy
Voltage:	±10V	1,25mV	±0,1% ±1mV
Current (Limit):	±500mA	62,5µA	±0,5% ±1mA

- Waveform generator using DDS (Direct Digital Synthesizer) or PPC (Point Per Clock synthesis)

Output type:	Range	Resolution	Accuracy
Sine, Tri, Arbitrary:	1Hz÷3MHz	1mHz	±10V

Memory depth:	32K word
Driver Slew Rate:	200V/µS
Driver Bandwidth:	10MHz
Signal DAC:	14Bit/50MHz
Limit DAC:	10Bit/50MHz
Offset DAC:	14Bit

2.1.4 DRC DC High Voltage Driver generator (4 quadrants)

Output type:	Range	Resolution	Accuracy
Voltage:	±100V	12,5mV	±0,2% ±25mV
Current:	±10mA	6,25µA	±1% ±100µA
	±100mA	62,5µA	±1% ±1mA

2.1.5 DC/AC Voltage meter

- Memory depth for acquisition: 64 K word
- Sample frequency: 1KHz ÷ 10MHz
- Resolution: 20ns

Impedance:	Range	Resolution	Accuracy
> 1GΩ	±0,2V	25µV	±0,1% ±0,2mV
> 1GΩ	±0,5V	62,5µV	±0,1% ±0,2mV
> 1GΩ	±1V	125µV	±0,1% ±0,2mV
> 1GΩ	±2V	250µV	±0,1% ±0,5mV
> 1GΩ	±5V	625µV	±0,1% ±1mV
> 1GΩ	±10V	1,25mV	±0,1% ±1mV
1MΩ – 50pF	±2V	250µV	±0,5% ±20mV
1MΩ – 50pF	±5V	625µV	±0,5% ±5mV
1MΩ – 50pF	±10V	1,25mV	±0,5% ±5mV
1MΩ – 50pF	±20V	2,50mV	±0,5% ±10mV
1MΩ – 50pF	±50V	6,25mV	±0,5% ±20mV
1MΩ – 50pF	±100V	12,5mV	±0,5% ±20mV

2.1.6 DC/AC Current meter (it can work alternatively as a secondary voltage meter)

- Memory depth for acquisition: 64 K word
- Sample frequency: 1KHz ÷ 10MHz
- Resolution: 20ns

Current meter:

Frequency	Range	Resolution	Accuracy
DC ÷ 100KHz	±0,5A	61,035µA	±0,1% ±300µA
DC ÷ 100KHz	±250mA	30,517µA	±0,1% ±150µA
DC ÷ 100KHz	±100mA	12,207µA	±0,1% ±60µA
DC ÷ 100KHz	±50mA	6,1035µA	±0,1% ±30µA
DC ÷ 100KHz	±25mA	3,0517µA	±0,1% ±15µA
DC ÷ 100KHz	±10mA	1,2207µA	±0,1% ±6µA
DC ÷ 100KHz	±5mA	610,35nA	±0,1% ±3 µA
DC ÷ 100KHz	±2,5mA	305,17nA	±0,1% ±1,5µA
DC ÷ 100KHz	±1mA	122,07nA	±0,1% ± 0,6µA
DC ÷ 100KHz	±500µA	61,035nA	±0,1% ±300 nA
DC ÷ 100KHz	±250µA	30,517nA	±0,1% ±150nA
DC ÷ 100KHz	±100µA	12,207nA	±0,1% ±60nA
DC ÷ 20KHz	±50µA	6,1035nA	±0,2% ±40nA
DC ÷ 20KHz	±25µA	3,0517nA	±0,3% ±30nA
DC ÷ 20KHz	±10µA	1,2207nA	±0,1% ±6nA
DC ONLY	±5µA	610,35pA	±0,2% ±4nA
DC ONLY	±2,5µA	305,17pA	±0,3% ±3nA
DC ONLY	±1µA	122,07pA	±0,3% ±3nA

In presence of FCMES option we have available the following ranges:

Frequency	Range	Resolution	Accuracy
DC ONLY	±5A	670µA	±0,2% ±2,5mA
DC ONLY	±2,5A	336µA	±0,2% ±1,25mA
DC ONLY	±1A	134µA	±0,2% ±0,5mA
DC ONLY	±0,5A	67µA	±0,2% ±0,25mA
DC ONLY	±250mA	33,6µA	±0,2% ±125µA
DC ONLY	±100mA	13,4µA	±0,2% ±50µA
DC ONLY	±50mA	6,7µA	±0,2% ±25µA
DC ONLY	±25mA	3,36µA	±0,2% ±12,5µA
DC ONLY	±10mA	1,34µA	±0,2% ±5µA
DC ONLY	±5mA	670nA	±0,2% ±2,5µA
DC ONLY	±2,5mA	336nA	±0,2% ±1,25µA
DC ONLY	±1mA	134nA	±0,2% ± 0,5µA
DC ONLY	±500µA	67nA	±0,2% ±250nA
DC ONLY	±250µA	33,6nA	±0,2% ±125nA
DC ONLY	±100µA	13,4nA	±0,2% ±50nA
DC ONLY	±50µA	6,7nA	±0,2% ±25nA
DC ONLY	±25µA	3,36nA	±0,2% ±12,5nA
DC ONLY	±10µA	1,34nA	±0,2% ±5,0nA
DC ONLY	±5µA	670pA	±0,2% ±2,5nA
DC ONLY	±2,5µA	336pA	±0,2% ±1,25nA
DC ONLY	±1µA	134pA	±0,2% ±0,5nA
DC ONLY	±*Custom*[1]	_____µA	±___% ±_____

In presence of PODAMP option connected to FCMES option we have available the following ranges:

Frequency	Range	Resolution	Accuracy
DC ONLY	±25A	3,36mA	±0,2% ±12,5mA
DC ONLY	±10A	1,34mA	±0,2% ±5mA

Voltage meter:

Frequency	**Impedance:**	**Range**	**Resolution**	**Accuracy**
DC ONLY	200KΩ	±0,2V	25µV	±0,2% ±0,2mV
DC ONLY	200KΩ	±0,5V	62,5µV	±0,2% ±0,2mV
DC ONLY	200KΩ	±1V	125µV	±0,2% ±0,2mV
DC ÷ 20KHz	200KΩ	±2V	250µV	±1% ±2mV
DC ÷ 20KHz	200KΩ	±5V	625µV	±1% ±5mV
DC ÷ 20KHz	200KΩ	±10V	1,25mV	±1% ±5mV
DC ÷ 100KHz	200KΩ	±20V	2,50mV	±1% ±10mV
DC ÷ 100KHz	200KΩ	±50V	6,25mV	±1% ±20mV
DC ÷ 100KHz	200KΩ	±100V	12,5mV	±1% ±20mV

[1] The scale of the instrument is function of the shunt defined by the ~SET SHUNT instruction

2.1.7 Counter

- Two channels counter/timer
- Frequency measurement: 0,1Hz to 10MHz
- Time measurement: 50nS to 10s Resolution: 10ns
- capability to measure time intervals between signals on the two channels
- Pulse counter capability: 1 to 2000000000 with the possibility to generate a trigger signal when a certain count is reached
- Base frequency 100MHz
- Precision ±10ppm

Input Impedance	Input Voltage	Threshold Resolution	Accuracy	Frequency Range
50Ω	±10V	1,25mV	±1% ±25mV	DC ÷ 10MHz
100KΩ	±10V	1,25mV	±1% ±25mV	DC ÷ 10MHz
1MΩ	±100V	12,5mV	±1% ±250mV	DC ÷ 300KHz

2.1.8 Pull-Up/Pull-Down resistors

- Resistor values: possibility to choose between 100Ω, 1KΩ,10KΩ, 100KΩ, 1MΩ
- Pull-up: to Vcc voltage
- Pull down to GND
- Pullup/down: to external voltage

2.1.9 Four digital bi-directional channel with three state output

Programmable voltage driver levels:	+/-12V
Programmable voltage sensor levels:	+/-12V
Driver current	max 500mA
Frequency	max 10MHz
Driver channel memory	32Kbit
Sensor channel memory	32Kbit
Programmable clock generator(PLL)	from 1Hz to 10MHz

Input Impedance	Input Voltage	Threshold Resolution	Accuracy	Frequency Range
50Ω	±10V	1,25mV	±1% ±25mV	DC ÷ 10MHz
100KΩ	±10V	1,25mV	±1% ±25mV	DC ÷ 10MHz
1MΩ	±100V	12,5mV	±1% ±250mV	DC ÷ 300KHz

2.1.10 Other functions implemented on the board

Other functions implemented on the board are the following:

- Oscilloscope: to visualize in a graphical form the digital acquired values
- Synchronization: to synchronize the several available instruments
- Real Time Acquisition /Processing
- autorange Measurements
- Mathematical functions for the vector of the acquired waveforms (FILTER,FFT,DFT)

The following figure, Fig. 2-2, shows an ACL module with FCMES and PODAMP options. Details on the two options are reported in chapters: “3.5 –“ Internal Multi Meter - IMM” and “3.6 - SHUNT”.

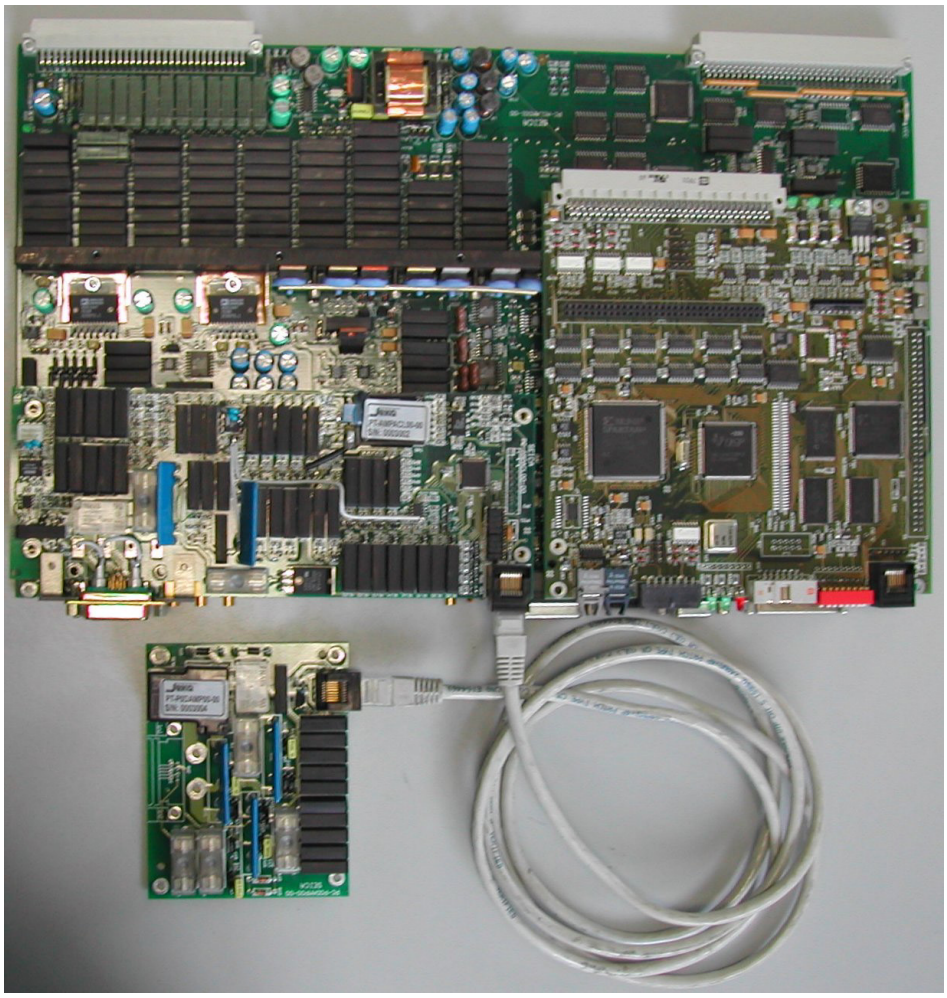

Fig. 2-2 - ACL module: ACL module with FCMES and PODAMP options

Section 3

3 Software Instruments management

This section lists the software instructions used for management of the instruments on the ACL module from within functional test programs.

3.1 Syntax in instrument software management

The ACL module instruments are used with software instructions executed from within the test programs. Before listing the instrument operating instructions using functional programs, the following points need to be mentioned: classification of system instruments, classification of instrument control instructions and general syntax of these instructions.

The system instruments, depending on their use, can be classified as:

- Generators (drivers)
- Meters (sensors)
- Loads (resistive and electronic)
- Commutators (connection/disconnection), (relay opening-closing),

The instrument operating instructions can be classified as:

- Instrument preparation instructions: ~SET
- Instrument use instructions: ~MEAS
- Instrument reset instructions: ~CLEAR
- Instrument status request instructions: ~GET

The general syntax for the instructions that control the instruments is described below.

~SET < *instrument* > , { < *instrument_parameters* > } ;
~MEAS < *instrument* > , { < *instrument_parameters* > } ;
~CLEAR < *instrument* > , { < *instrument_parameters* > } ;
~GET < *instrument* > , { < *instrument_parameters* > } ;

< *instrument* >: **<** *instruments group*> **|** **<** *instrument* >

< *instruments group* >: {**<** *instrument* >,… }

< *instrument* >: **NAME1 | NAME2** …….. **| NAMEi**

< *instrument_parameters* >: [{**PARAMETER**},{**PARAMETER**=<*value*>},{**PARAMETER**=<*option*> }…]

<*value*>: <*constant*> | compiled variable | runtime variable | arithmetic expression
<*option*>: OPT1|OPT2|…|OPTn is the list of values that the parameter may be assigned

<*constant*>: <*qualifier*>< *number*>

<*qualifier*>: [B] | [0x | H] | [O]|[“” | D]

where:
[B] <*number*> is a binary number.
[0x | H] <*number*> is a hexadecimal number.
[O] <*number*> is a octal number.
[“” | D] <*number*> is a decimal number.

The syntax in the **PARAMETER**=<*option*> format almost always has a corresponding syntax in the **PARAMETER**=<*value*> format that can be used in the test programs. In the description of each instrument, each **PARAMETER**=<*option*> type syntax also includes the corresponding <*option*> - <*value*> syntax. In other words, instead of writing: PARAMETER=NOME_OPZIONE you can write: PARAMETER=VALORE.
In the **PARAMETER**=<*option*> syntax, if there is only one option name in the possible option values for the instruction, **PARAMETER=** can be omitted and only the option name entered. In other words, instead of writing: PARAMETRO=NOME_OPZIONE you can write: NOME_OPZIONE.

The Tab. 4-1, in Appendix A indicates the two types of syntax but it is important to bear in mind that the use of the **PARAMETER**=<*value*> syntax instead of the **PARAMETER**=<*option*> syntax reduces test program readability.

In the **PARAMETER**=<*constant*> expression, the value assigned to <*constant*> indicates a value with a unit of measure. It is possible to indicates the value in multiples or sub-multiples of the base unit, using the notation in Tab. 3-1.

Tab. 3-1 ACL module: syntax for constant that identify unity of measure

The notation:	Indicates that <*constant*> is expressed in:	Value in unit of measurea
<*constant*>MEG	Mega of the base unit (M)	<*constant*>*10^{6}
<*constant*>K	Kilo of the base unit (K)	<*constant*>*10^{3}
<*constant*>	Base unit	<*constant*>*10^{0}
<*constant*>M	Milli of the base unit (M)	<*constant*>*10^{-3}
<*constant*>U	Micro of the base unit (µ)	<*constant*>*10^{-6}
<*constant*>N	Nano of the base unit (n)	<*constant*>*10^{-9}
<*constant*>P	Pico of the base unit (p)	<*constant*>*10^{-12}

The ACL module instruments are:

< *instrument* >: **DRA | DRB | DRC | IMM | SCOUNTER|PULL|GND|LINE|LINE_EXT**

The **~GET <** *instrument* > , { < *instrument_parameters* > } ; function is a function used to receive in a list of variables the current value of the parameters related to the **<** *instrument* >.
The syntax of < *instrument_parameters* > is:

<*parameter*>=<*variable*> where <*parameter*> indicates the name of the parameter you wish to know the value for and <*variable*> indicates the variable that this value will be inserted into.

This function can be applied to all the ACL module instruments and since the syntax is always the same, it is not described in the sections on the different instruments since the description in this section should be sufficient.

Example of **~GET <** *instrument* > used for DRA primary driver

```
DECLARE RUNTIME FLOAT F1,F2,F3,F4,F5,F6,F7,F8,F9,F10,F11,F12,F13,F14,F15,F16,F17,F18;

~GET DRA    V=F1   I=F2    OFFSET=F3    RANGE=F4    MODE=F5    VNEG=F6    FREQ=F7    TIME=F8
            WAVE=F9    START=F10    N_SAMPLE=F11    ADDR=F12    DELAY_TRIG=F13    EVOLUTION=F14
            COUPLING=F15    OUT=F16    DOMAIN=F17   TIME_RELE=F18 ;
```

During the development of test programs, the instrument control instructions can be inserted in the source file using a graphic editor, specially developed for system instrument control by the test programs, rather than the text editor.
The graphic editor: **F**unctional **G**uided **E**ditor (FGE), it is available in the environment of development functional programs.
For a detailed description of system functional programming, refer to the **Functional Programming** manual.

3.2 Primary driver - DRA -

The DRA driver is an instrument assigned to the ACL module with the following characteristics:

- Voltage limited programmable current AC/DC generator.
- Current limited programmable voltage AC/DC generator.
- DDS or PPC arbitrary waveform generator.
- Coupling of output signal: AC/DC.
- Frequency of output signal: DC/1MHz (DDS) – DC/50MHz (PPC).
- Value of output voltage: ± 10V.
- Value of output current: ± 500mA.

The functions **~SET DRA** and **~CLEAR DRA,** that can be used by functional programs, have been provided for this instrument.

3.2.1 ~SET DRA

The ~SET DRA instruction is used in functional programs to program the DRA primary driver.

~SET DRA [**V=***value*] [**I=***value*] [**OFFSET=***value*] **[RANGE=AUTO|1V|10V|50uA|500uA|5mA|50mA|500MA]**
[MODE=V|I] [**VNEG=***value*] [**FREQ=***value*] [**TIME=***value*]
[WAVE=DC|SINE|TRI|RECT|ARB1÷10| VECT1÷10]
[START=IMMEDIATE|CNT_START|CNT_STOP|CNT_COMP|HW1|HW2|SW1|CLEAR|STOP_EVO]
[**N_SAMPLE=**value] [**ADDR=***value*] [**DELAY_TRIG=**value] [**EVOLUTION=***value*]
[COUPLING=DC|AC] [OUT=NONE|L1|L2|L8] [DOMAIN=DRA|PC|ALL]
[TIME_RELE=ON|OFF];

V=*value* **[-10÷+10V, default: 0V]**
This indicates the programming value of the instrument output voltage with the following meaning:
- value of the instrument output voltage if the instrument is programmed in MODE=V,
- the positive limit value of the supplied voltage if the instrument is programmed in MODE=I.

If the instrument is programmed in AC (value of the WAVE parameter different from DC) the value of the **V** parameter shows the peak to peak value of the output signal.

I=*value* **[-0,5÷+0.5A, default: 0.01A]**
This indicates the programming value of the current supplied by the instrument with the following meaning:
- value of the current supplied by the instrument if the instrument is programmed in MODE=I,
- the limit value of the supplied current if the instrument is programmed in MODE=V.

If the instrument is programmed in AC (value of the WAVE parameter different from DC) the value of the **I** parameter shows the peak to peak value of the output signal.

OFFSET=*value* **[-10÷+10V/-0, 5÷+0, 5A, default: 0]**
This indicates the output signal offset and is only significant when the instrument is programmed in AC. The offset refers to voltage or current values according to the value of the MODE parameter that defines the instrument operating mode (MODE=V means voltage generator, MODE=I means current generator).

NOTE: the OFFSET value added to the V value must be in the range: [-10÷+10V]. The OFFSET value added to the I value must be in the range: [-0,5÷+0,5A].

RANGE=*option|value* **[AUTO|[1V|50uA]|10V|500uA]|5mA|50mA|500MA|500NA|5UA, default: AUTO]**

This indicates the range of the supplied signal output signal i.e. a full scale value that contains the instrument programming value. The closer the full scale value is to the instrument programming value, then the more accurate instrument resolution will be. The parameter has eight possible values with a different meaning that depends on the instrument operating mode:

AUTO | 0 indicates that the parameter value is automatically set according to the voltage or current programming value both in MODE=V and MODE=I.

1V | 50UA | 1 indicates that the parameter will be set to:
- 0.05mA if the MODE parameter is set to value I.
- 1V if the MODE parameter is set to value V.

10V | 500UA | 2 indicates that the parameter will be set to:
- 0.5mA if the MODE parameter is set to value I.
- 10V if the MODE parameter is set to value V.

5MA | 3 indicates that the parameter will be set to:
- 5mA if the MODE parameter is set to value I.
- not significant if the MODE parameter is set to value V.

50MA | 4 indicates that the parameter will be set to:
- 50mA if the MODE parameter is set to value I.
- not significant if the MODE parameter is set to value V.

500MA | 5 indicates that the parameter will be set to:
- 500mA if the MODE parameter is set to value I.
- not significant if the MODE parameter is set to value V.

500NA | 6 indicates that the parameter will be set to:
- 0.0005mA if the MODE parameter is set to value I.
- not significant if the MODE parameter is set to value V.

5UA | 7 indicates that the parameter will be set to:
- 0.005mA if the MODE parameter is set to value I.
- not significant if the MODE parameter is set to value V.

MODE=*option|value* **[V|I, default: V]**

Indicates the instrument operating mode:

V | 0 the instrument is programmed as current limited voltage generator.

I | 1 the instrument is programmed as voltage limited current generator.

VNEG=*value* **[-10÷0V, default: 0V]**

Indicates the negative limit value of the supplied voltage if the instrument is programmed in MODE=I.

FREQ=*value* **[0.001÷50,000,000Hz, default: 1,000Hz]**

This indicates the output signal frequency value and is significant for WAVE parameter values that are not DC.

The parameter is expressed in Hertz and may have the values:
- 0.001÷1,000,000 for waveforms generated with the DDS technique
- 1000÷50,000,000 for waveforms generated with the PPC technique.

TIME=*value* **[0.00001÷1 sec, default: 0.001sec]**

This indicates the value of time taken by the generator to pass from one programming level of the output signal to the next value and is significant when the WAVE parameter has DC values. In other words, it defines the up or down ramp of the signal.

WAVE=*option|value* **[DC|SIN|TRI|RECT|ARB1÷ARB10| VECT1÷VECT10, default: DC]**

Defines the waveform produced by the generator and may have values:

DC | 0 The output signal is a continuous signal.

SINE | 1 The output signal has a sinusoidal waveform.

TRI | 2	The output signal has a triangular waveform.
RECT | 3	The output signal has a rectangular waveform.
ARB1÷ARB10 | |4|5|6|7|8|9|10|11| 12|13	The waveform of the output signal has a waveform described by 32 KW of values stored in a flash memory on the ACL module. For the generation of SIN, TRI, RECT, ARB1÷ARB10 waveforms, the DDS technique is used.
VECT1÷VECT10 | |14|15|16|17|18|19| 20|21|22|23	The waveform of the output signal has a waveform described by a variable number of values stored in a flash memory on the ACL module. For the generation of VECT1÷VECT10 waveforms, the PPC technique is used.

START=*option|value* **[IMMEDIATE|CNT_START|CNT_STOP|CNT_COMP|HW1|HW2|SW1 |CLEAR|STOP_EV, default:IMMEDIATE]**

This indicates the start method for signal generation. The parameter has seven possible values:

IMMEDIATE | 0	This indicates that generation of the output signal will start immediately.
CNT_START | 1	This indicates that generation of the output signal will start when the "Start Trigger" event of the COUNTER on the ACL module occurs.
CNT_STOP | 2	This indicates that generation of the output signal will start when the "Stop Trigger" event on the SCOUNTER instrument on the ACL module occurs.
CNT_COMP | 3	This indicates that generation of the output signal will start when the "Compare" event on the SCOUNTER instrument on the ACL module occurs.
HW1 | 4	This indicates that generation of the output signal will start when the HW1 signal from outside the ACL module is activated. (signal name: RTCIN1).
HW2 | 5	This indicates that generation of the output signal will start when the HW2 signal from outside the ACL module is activated. (signal name: RTCIN2).
SW1 | 6	This indicates that generation of the output signal will start when the "Trigger SW1" event that can be generated by the IMM and SCOUNTER instruments occurs.
CLEAR | 7	This indicates that the driver will be programmed but the signal generation isn't started. To start the signal generation, a ~SET DRA instruction must be executed with the value of the START parameter different from. CLEAR.
STOP_EVO | 8	This indicates that the continual generation of the signal set with the parameter EVOLUTION=0 of the previous ~SET DRA instruction will be stopped.

N_SAMPLE=*value* **[0÷32,768, default: 1.000]**

This indicates the number of samples to use when the waveform is generated using the PPC technique.

ADDR=*value* **[0÷32,768, default: 0]**

This indicates the start address within the range of memory addresses that describe the waveform selected with the WAVE parameter from which scanning of the values to generate the output signal begins.

DELAY_TRIG=*value* **[0,00000002÷60sec, default: 0sec]**

This indicates the delay programmed from the trigger event to when the output signal is generated by the instrument. With trigger event we mean the starting conditions for the signal generation, defined with the **START** parameter.

EVOLUTION=*value* **[0÷65,535, default: 1]**

This indicates the number of repeats of a full cycle of the selected waveform and is significant for WAVE parameter values that are not DC.

A value 0 in the parameter has a meaning of CONTINUE, i.e. the output signal is continuously generated

COUPLING=*option|value* **[DC|AC, default: DC]**
This indicates coupling of the signal produced by the generator.
DC | 0 this indicates that the output signal is direct current coupled.
AC | 1 this indicates that output signal is alternating current coupled.

OUT=*option|value* **[NONE|L1|L2|L8, default: NONE]**
This defines the ACL module line that the DRA instrument output will be connected to. It has these possible values:
NONE | 0 the instrument is not connected to an internal measure line.
L1 | 1 the instrument is connected to internal measure line L1.
L2 | 2 the instrument is connected to internal measure line L2.
L8 | 8 the instrument is connected to internal measure line L8.

DOMAIN=*option|value* **[DRA|PC|ALL, default: DRA]**
This parameter synchronizes program execution according to the status of the ACL module, DRA instrument or neither of the two.
The parameter may have the following values:
DRA | 0 indicates that the ACL module will assume control and relinquish it at the end of DRA program execution.
PC | 1 indicates that the Main Computer will remain in control without waiting for the end of program execution of DRA or all instruments.
ALL | 2 indicates that the ACL module will assume control and will relinquish it at the end of program execution of all instruments.

TIME_RELE=*option|value* **[ON|OFF, default: ON]**
This determines if the relay switching time used for instrument programming must elapse before quitting the command. It may have these values:
ON | 0 before quitting the command, the time corresponding to the relay switching time must elapse
OFF | 1 after programming, the switching time before quitting the command does not have to elapse.
The parameter can be useful for sequential programming of different instruments before they are used: all programming before the last can be performed with the value of this parameter set to OFF and only the last programming must be performed with the parameter value set to ON.

3.2.2 ~CLEAR DRA

The ~CLEAR DRA instruction is used in functional programs to disable the DRA primary driver by disconnecting it from the measure lines.

~CLEAR DRA;

The ~CLEAR DRA instruction resets the instrument and set its parameters to the default value. Default values are indicated in Appendix A Tab. 4-1.

3.2.2.1 Example of use of DRA instrument

The following instructions show how the DRA resource is used with a functional program.

```
…
TESTNAME=001;
SECTION SET;
~CLEAR DRA ;            !Clear DRA: Hardware reset
~SET DRA ;              !Set DRA to default parameters
~LI1 33 1;              !Connect analog measure line L1 to channels 33 and 1
SECTION MEAS;
SECTION END;
ENDTESTNAME;

TESTNAME=002;       !On channels 33 and 1: 300mV DC, 100ma Max,
SECTION SET;
~SET DRA V=.3 I=.01 OFFSET=0 RANGE=10V MODE=V TIME=1 WAVE=DC  OUT=L1 ;
SECTION END;
ENDTESTNAME;

TESTNAME=003;       !On channels 33 and 1: 0,5mA DC, 700mV Max, -300mV Min
SECTION SET;
~SET DRA V=.700 I=0.01 OFFSET=0 RANGE=500UA MODE=I VNEG=.300 TIME=0.001 DC  OUT=L1 ;
SECTION END;
ENDTESTNAME;

TESTNAME=004;       !On channels 33 and 1: 300mV AC, 100ma Max, Offset: 500mV, Wave: sine.
SECTION SET;
~SET DRA V=.300 I=0.010 OFFSET=.500 FREQ=1000 SINE RANGE=10V EVOLUTION=40 OUT=L1 ;SECTION END;
ENDTESTNAME;

TESTNAME=005;       !On channels 33 and 1:Volt DC variable output,
SECTION SET;
        ~for f=0 to .999 step 0.01 ;
                ~delay 2m;
                ~SET DRA V=f I=.010 OFFSET=0 TIME=0.0005 DC RANGE=10V DELAY_trig=0.0 out=l1 ;
                ~delay 2m;
                ~SET DRA V=.500 I=0.010 OFFSET=0 TIME=0.0005 DC RANGE=10V DELAY_trig=0.0 OUT=L1 ;
        ~endfor;
SECTION END;
ENDTESTNAME;
```

The figures below indicate the pattern of the values supplied by the DRA primary driver on channels 33 and 1 according to the programming performed in the tests from TESTNAME002 to TESTNAME005

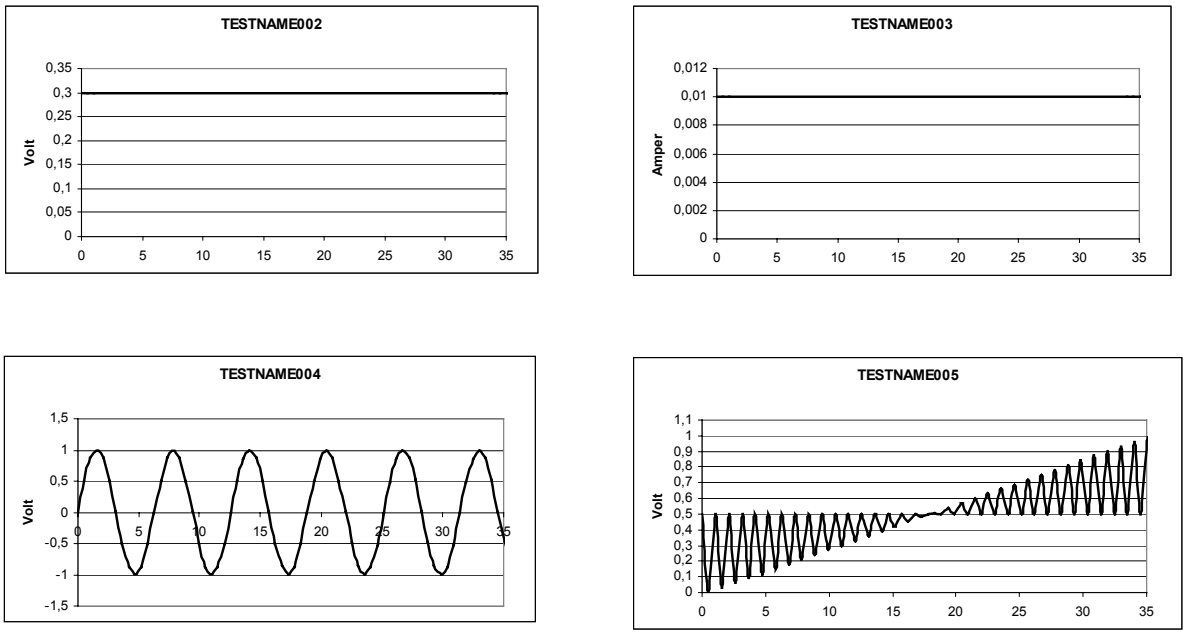

Fig. 3-1- ACL module: Examples of DRA output

The following instructions give an example of a subroutine that can be inserted in a library file to perform the ~GET DRA function. The value of the instrument parameters will be displayed on the STATIC TERMINAL of the functional environment or in the TEST REPORT window of the in-circuit test environment.

```
…
~SUBR GETDRA (FLOAT OUT);

DECLARE RUNTIME FLOAT F1,F2,F3,F4,F5,F6,F7,F8,F9,F10,F11,F12,F13,F14,F15,F16,F17,F18;

~GET DRA
        V=F1
        I=F2
        OFFSET=F3
        RANGE=F4
        MODE=F5
        VNEG=F6
        FREQ=F7
        TIME=F8
        WAVE=F9
        START=F10
        N_SAMPLE=F11
        ADDR=F12
        DELAY_TRIG=F13
        EVOLUTION=F14
        COUPLING=F15
        OUT=F16
        DOMAIN=F17
        TIME_RELE=F18 ;

~FORMAT 10  4 ;
~IF OUT=0;                                          !Output on STATIC TERMINAL (functional environment)
   ~WRITE "V          =" F1 ;~CURSOR CR ;
   ~WRITE "I          =" F2 ;~CURSOR CR ;
   ~WRITE "OFFSET     =" F3 ;~CURSOR CR ;
   ~WRITE "RANGE      =" F4 ;~CURSOR CR ;
   ~WRITE "MODE       =" F5 ;~CURSOR CR ;
   ~WRITE "VNEG       =" F6 ;~CURSOR CR ;
   ~WRITE "FREQ       =" F7 ;~CURSOR CR ;
   ~WRITE "TIME       =" F8 ;~CURSOR CR ;
   ~WRITE "WAVE       =" F9 ;~CURSOR CR ;
   ~WRITE "START      =" F10 ;~CURSOR CR ;
   ~WRITE "N_SAMPLE   =" F11 ;~CURSOR CR ;
   ~WRITE "ADDR       =" F12 ;~CURSOR CR ;
   ~WRITE "DELAY_TRIG =" F13 ;~CURSOR CR ;
   ~WRITE "EVOLUTION  =" F14 ;~CURSOR CR ;
   ~WRITE "COUPLING   =" F15 ;~CURSOR CR ;
   ~WRITE "OUT        =" F16 ;~CURSOR CR ;
   ~WRITE "DOMAIN     =" F17 ;~CURSOR CR ;
   ~WRITE "TIME_RELE  =" F18 ;~CURSOR CR ;
~ELSE;                                              !Output on TEST REPORT dialog of the in-circuit test environment
   ~REPORT "V          =" F1 ;
   ~REPORT "I          =" F2 ;
   ~REPORT "OFFSET     =" F3 ;
   ~REPORT "RANGE      =" F4 ;
   ~REPORT "MODE       =" F5 ;
   ~REPORT "VNEG       =" F6 ;
   ~REPORT "FREQ       =" F7 ;
   ~REPORT "TIME       =" F8 ;
   ~REPORT "WAVE       =" F9 ;
   ~REPORT "START      =" F10 ;
   ~REPORT "N_SAMPLE   =" F11 ;
   ~REPORT "ADDR       =" F12 ;
   ~REPORT "DELAY_TRIG =" F13 ;
   ~REPORT "EVOLUTION  =" F14 ;
   ~REPORT "COUPLING   =" F15 ;
   ~REPORT "OUT        =" F16 ;
   ~REPORT "DOMAIN     =" F17 ;
   ~REPORT "TIME_RELE  =" F18 ;
~ENDIF;
```

3.3 Secondary driver - DRB -

The DRB driver is an instrument assigned to the ACL module with the following characteristics:

- Current limited programmable voltage AC/DC generator
- DDS or PPC arbitrary waveform generator (or sample buffer playback)
- Coupling of output signal: AC/DC
- Frequency of output signal: DC/3MHz (DDS) – DC/50MHz (PPC)
- Value of output voltage: ± 10V
- Value of output current: ± 500mA
- High frequency signal output
- Driver used for guarding in ICT test on signals generated by DRA
- Driver used for signals in functional tests as a voltage tracker

The functions **~SET DRB** and **~CLEAR DRB,** that can be used by functional programs, have been provided for this instrument.

3.3.1 ~SET DRB

The ~SET DRB instruction is used in functional programs to program the DRB secondary driver.

~SET DRB [**V=***value*] [**I=***value*] [**OFFSET=***value*] **[RANGE=AUTO|1V|10V]**
[MODE=V|GUARD|FOLLOWER] [SENSE=INT|L4|L5] [**FREQUENCY=***value*][**TIME=***value*]
[WAVE=DC|SINE|TRI|RECT|ARB1÷10| VECT1÷10]
[START=IMMEDIATE|CNT_START|CNT_STOP|CNT_COMP|HW1|HW2|SW1|CLEAR|STOP_EVO]
[**N_SAMPLE=**value] [**ADDR=***value*] [**DELAY_TRIG=**value] [**EVOLUTION=***value*]
[IN=DAC|L2|L4|L6|L8] [OUT=NONE|L1|L2|L3|L4|L5|L7|L4HF]
[DOMAIN=DRB|PC|ALL] [TIME_RELE=ON|OFF];

V=*value* **[-10÷+10V, default: 0V]**
This indicates the programming value of the instrument output voltage. If the instrument is programmed in AC the parameter indicates the peak to peak voltage value of the instrument output signal.

I=*value* **[-0,5÷+0.5A, default: 0.01A]**
This indicates the programming value of the maximum current supplied by the instrument.

OFFSET=*value* **[-5÷+5V, default: 0V]**
This indicates the output signal voltage offset value and is only significant when the instrument is programmed in AC.

RANGE=*option|value* **[AUTO|1V|10V, default: AUTO]**
This indicates the range of the supplied signal output signal i.e. a full scale value that contains the instrument programming value. The closer the full scale value is to the instrument programming value, then the more accurate instrument resolution will be. The parameter has three possible values:

AUTO | 0 indicates that the parameter value is automatically set according to the programming value of the voltage supplied by the instrument.
1V | 1 indicates that the parameter will be set to 1V.
10V | 2 indicates that the parameter will be set to 10 V.

MODE=*option|value* **[V|GUARD|FOLLOWER, default: V]**
Indicates the instrument operating mode:

V | 0 The instrument is programmed as current limited voltage generator.
GUARD | 1 The instrument is programmed as an internal voltage follower connected to the DRA generator. In this mode, the DRB generator

is used as a guard generator on the signal supplied by the DRA generator.

FOLLOWER | 2 The instrument is programmed as an external voltage follower on one of the lines L2, L4, L6 or L8 as defined by the IN parameter.

The default value for the MODE parameter is V.

SENSE= *option|value* **[INT|L4|L5, default: INT]**

This defines the ACL module line that the SENSE input of the DRB instrument is connected to. The SENSE input on the instrument is the input that supplies the voltage level required for instrument output. The parameter may have the following values:

INT | 0 The instrument SENSE input is internally connected to the instrument output.

L4 | 4 The instrument SENSE input is connected to internal measure line L4.

L5 | 5 The instrument SENSE input is connected to internal measure line L5.

FREQ=*value* **[0.001÷50,000,000Hz, default: 1,000Hz]**

This indicates the output signal frequency value and is significant for WAVE parameter values that are not DC.

The parameter is expressed in Hertz and may have the values:

- 0.001÷3,000,000 for waveforms generated with the DDS technique
- 1000÷50,000,000 for waveforms generated with the PPC technique.

TIME=*value* **[0.00001÷1 sec, default: 0.001sec]**

This indicates the value of time taken by the generator to pass from one programming level of the output signal to the next value and is significant when the WAVE parameter has DC values. In other words, it defines the up or down ramp of the signal.

WAVE=option|value **[DC|SIN|TRI|RECT|ARB1÷ARB10| VECT1÷VECT10, default: DC]**

Defines the waveform produced by the generator and may have values:

DC | 0 The output signal is a continuous signal.

SINE| 1 The output signal has a sinusoidal waveform.

TRI | 2 The output signal has a triangular waveform.

RECT | 3 The output signal has a rectangular waveform.

ARB1÷ARB10 | |4|5|6|7|8|9|10|11| 12|13 The waveform of the output signal has a waveform described by 32 KW of values stored in a flash memory on the ACL module. For the generation of SIN, TRI, RECT, ARB1÷ARB10 waveforms, the DDS technique is used.

VECT1÷VECT10 | |14|15|16|17|18|19| 20|21|22|23 The waveform of the output signal has a waveform described by a variable number of values stored in a flash memory on the ACL module. For the generation of VECT1÷VECT10 waveforms, the PPC technique is used.

START=*option|value* **[IMMEDIATE|CNT_START|CNT_STOP|CNT_COMP|HW1|HW2|SW1 |CLEAR|STOP_EV, default:IMMEDIATE]**

This indicates the start method for signal generation. The parameter has seven possible values:

IMMEDIATE | 0 Indicates that generation of the output signal will start immediately.

CNT_START | 1 Indicates that generation of the output signal will start when the "Start Trigger" event of the SCOUNTER on the ACL module occurs.

CNT_STOP | 2 Indicates that generation of the output signal will start when the "Stop Trigger" event on the SCOUNTER instrument on the ACL module occurs.

CNT_COMP | 3 Indicates that generation of the output signal will start when the "Compare" event on the SCOUNTER instrument on the ACL module occurs.

HW1 | 4 Indicates that generation of the output signal will start when the HW1 signal from outside the ACL module occurs. (signal name: RTCIN1).

HW2 | 5 Indicates that generation of the output signal will start when the HW2 signal from outside the ACL module occurs. (signal name: RTCIN2).

SW1 | 6 Indicates that generation of the output signal will start when the "Trigger SW1" event that can be generated by the IMM and SCOUNTER instruments occurs.

CLEAR | 7 Indicates that the driver will be programmed without starting generation of the instrument output signal. To start generation, a ~SET DRB instruction must be executed with a value assigned to the START parameter different form CLEAR.

STOP_EVO | 8 Indicates that the continual generation of the signal set with the parameter EVOLUTION=0 of the previous ~SET DRA instruction will be stopped.

N_SAMPLE=*value* **[0÷32,768, default: 1.000]**
Indicates the number of samples to use when the waveform is generated using the PPC technique.

ADDR=*value* **[0÷32,768, default: 0]**
Indicates the start address within the range of memory addresses that describe the waveform selected with the WAVE parameter from which scanning of the values to generate the output signal begins.

DELAY_TRIG=*value* **[0,00000002÷60sec, default: 0sec]**
Indicates the delay programmed from the trigger event to when the output signal is generated by the instrument. . With trigger event we mean the starting conditions for the signal generation, defined with the **START** parameter.

EVOLUTION=*value* **[0÷65,535, default: 1]**
This indicates the number of repeats of a full cycle of the selected waveform and is significant for WAVE parameter values that are not DC.
A value 0 in the parameter has a meaning of CONTINUE, i.e. the output signal is continuously generated

IN=*option|value* **[DAC|L2|L4|L6|L8, default: DAC]**
This defines the ACL module line that the DRB instrument input will be connected to. It may have these values:

DAC | 0 The instrument is internally connected to the DAC on the waveform generator output, DDS or PPC.
L2 | 2 The instrument is connected to internal measure line L2.
L4 | 4 The instrument is connected to internal measure line L4.
L6 | 6 The instrument is connected to internal measure line L6.
L8 | 8 The instrument is connected to internal measure line L8.

OUT=*option|value* **[NONE|L1|L2|L3|L4|L5|L6|L7|L4HF, default: NONE]**
This defines the ACL module line that the DRB instrument output will be connected to. It may have these values:

NONE | 0 The instrument is not connected to an internal measure line.
L1 | 1 The instrument output is connected to internal measure line L1.
L2 | 2 The instrument output is connected to internal measure line L2.
L3 | 3 The instrument output is connected to internal measure line L3.
L4 | 4 The instrument output is connected to internal measure line L4.
L5 | 5 The instrument output is connected to internal measure line L5.
L7 | 7 The instrument output is connected to internal measure line L7.
L4HF | 9 The instrument high frequency output is connected to internal measure line L4. The high frequency output is the output that should be used

when the generator is programmed to give high frequency performance as described in 2.1.3 .

DOMAIN=*option|value* **[DRA|PC|ALL, default: DRB]**
This parameter synchronizes program execution according to the status of the ACL module, DRB instrument or neither of the two.
The parameter may have the following values:

DRB | 0 indicates that the ACL module will assume control and will relinquish it at the end of DRB program execution.

PC | 1 indicates that the Main Computer will remain in control without waiting for the end of program execution of DRB or all instruments.

ALL | 2 indicates that the ACL module will assume control and will relinquish it at the end of program execution of all instruments.

TIME_RELE=*option|value* **[ON|OFF, default: ON]**
This determines if the relay switching time used for instrument programming must elapse before quitting the command. It may have these values:

ON | 0 before quitting the command, the time corresponding to the relay switching time must elapse

OFF | 1 after programming, the switching time before quitting the command does not have to elapse.

The parameter can be useful for sequential programming of different instruments before they are used: all programming before the last can be performed with the value of this parameter set to OFF and only the last programming must be performed with the parameter value set to ON.

The following figures show the data flow and physical connections of the two generators, DRA and DRB.

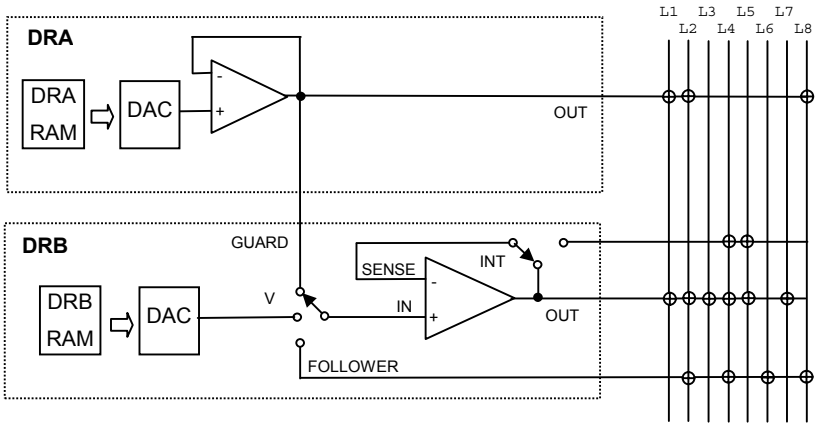

Fig. 3-2- ACL module: DRA and DRB

3.3.2 ~CLEAR DRB

The ~CLEAR DRB instruction is used in functional programs to disable the DRB secondary driver by disconnecting it from the measure lines.

~CLEAR DRB;

The ~CLEAR DRB instruction resets the instrument and set its parameters to the default value. Default values are indicated in Appendix A Tab. 4-1.

3.4 HV - DRC - driver

The DRC driver is an instrument assigned to the ACL module with the following characteristics:

- Programmable current and voltage limited DC generator
- Operating on four dials
- Value of output voltage: ± 100V
- Value of output current: ± 0.1A
- Two current carrying capacities (10/100mA and 0.1/10mA)
- Slew rate: 10V/µs
- 14 bit resolution for current and voltage values

The functions **~SET DRC** and **~CLEAR DRC,** that can be used by functional programs, have been provided for this instrument.

3.4.1 ~SET DRC

The ~SET DRB instruction is used in functional programs to program the DRC primary driver.

~SET DRC [**V=***value*] [**I=***value*] **[OUT=NONE|L1|L2|L4|L6|]**
[START=IMMEDIATE|SW1];

V=*value* **[-100÷+100V, default: 0V]**
This indicates the programming value of the instrument output voltage.

I=*value* **[±0,0001÷±0,1A, default: 0,01A]**
This indicates the programming value of the maximum current supplied by the instrument.

OUT=*option|value* **[NONE|L1|L2|L4|L6, default: NONE]**
This defines the ACL module line that the DRC instrument output will be connected to. It may have these values:

NONE | 0	The instrument is not connected to an internal measure line.
L1 | 1	The instrument output is connected to internal measure line L1.
L2 | 2	The instrument output is connected to internal measure line L2.
L4 | 4	The instrument output is connected to internal measure line L4.
L6 | 6	The instrument output is connected to internal measure line L6.

START=*option|value* **[IMMEDIATE|SW1, default:IMMEDIATE]**
This indicates the start method for signal generation. The parameter has seven possible values:

IMMEDIATE | 0	Indicates that generation of the output signal will start immediately.
SW1 | 1	Indicates that generation of the output signal will start when the "Trigger SW1" event that can be generated by the IMM and SCOUNTER instruments occurs.

3.4.2 ~CLEAR DRC

The ~CLEAR DRC instruction is used in functional programs to disable the DRC driver by disconnecting it from the measure lines and switching off the positive booster.

~CLEAR DRC;

The ~CLEAR DRC instruction resets the instrument and set its parameters to the default value. Default values are indicated in Appendix A Tab. 4-1.

3.5 Internal Multi Meter - IMM -

The IMM instrument is the instrument assigned to the ACL module that performs the analog measurements during testing. It basically consists of two instruments: a voltage meter and a current meter. The main characteristics of this internal multimeter are:

- Real time measurements in memory.
- Post processing measurements from information stored in buffers.
- One shot measurements.
- Types of measurement: peak, peak to peak, maximum, minimum, RMS, ΔV/ΔT, module and phase values.
- Current meter with virtual ground input on Operational Amplifier.
- Memory depth for acquisition of 64Kwords.
- Sampling frequency up to 10MSp/sec.
- Input trigger, Output trigger and Post trigger.
- Different filters on vector of acquired values

The functions **~SET IMM, ~MEAS IMM** and **~CLEAR IMM** that can be used by functional programs, have been provided for this instrument.

3.5.1 ~SET IMM

The ~SET IMM instruction is used in the function programs to program the two analog meters, MEAS_V and MEAS_I. MEAS_V is a voltage meter that measures the voltage between the two poles INP_VPOS and INP_VNEG. MEAS_I is a current meter that measures the input current on the INP_I pole, physically connected to the internal line L1, that implements a virtual ground level and measures the value of I on Rs. The value of the virtual level is determined by the connection defined for the REF_I point. It may be:

L3 The REF_I point is connected to measure line L3.
L7 The REF_I point is connected to measure line L7.
GND The REF_I point is connected to the ACL module ground.

The meter has a sense point that compensates for the presence of resistive values in the connections between the measurement point and the meter input. The sense point is determined by the connection defined for the SENSE_I point that may be:

L1_I The SENSE_I point is internally connected to the INP_I_V2 point.
L5 The SENSE_I point is connected to measure line L5.

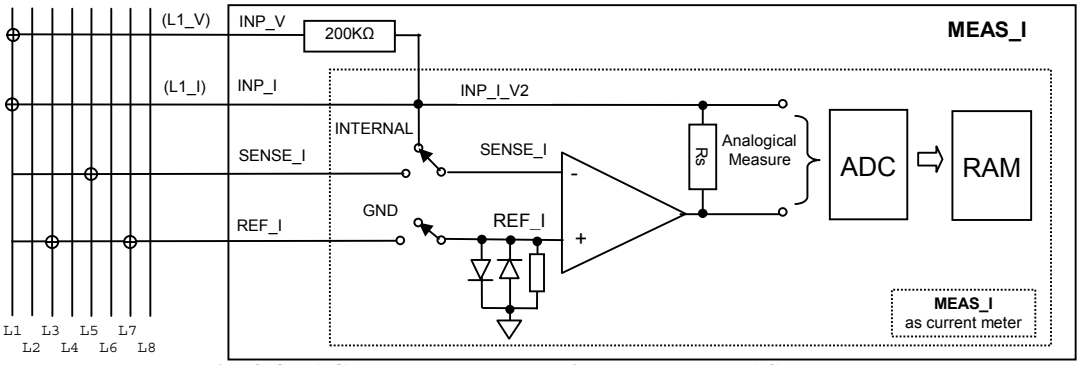

Fig. 3-3 - ACL module: Internal instrument MEAS_I

With the INP_V pole connected to line L1 with resistance of 200KÙ, MEAS_I can be used as a second voltage meter.

The FCMES (Floating Current Measurement) option is a current meter with two measurements points isolated from ground ($\pm 100V_{MAX}$). Without the FCMES option in the system, one current meter pole is connected to ground, as shown in the designs of Fig. 3-4. The presence of the FCMES option enables you to increase the instrument scale up to 5A and in this case the two measurement points are located on the FCMES module.

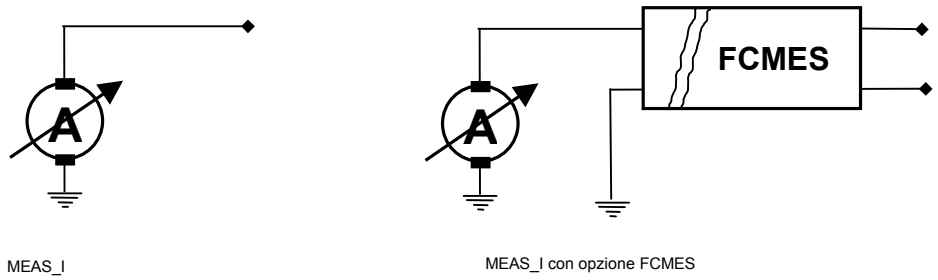

Fig. 3-4 - ACL module: Internal instrument MEAS_I and MEAS_I with FCMES option

The PODAMP option is a further expansion of the FCMES. The PODAMP, is connected to the FCMES through a phone connector RJ45, and it enables you to increase the measurement scale up to 20A. The remote control of the instrument shunt resistances is also available.
Fig. 3-5 shows the connections of the FCMES and PODAMP to the MEAS_I instrument. The figure shows the maximum current values which can be measured with the FCMES according to the points used during the measure. In particular:

- I_{MAX}= 500mA with the measure points connected to the system analogical lines.
- I_{MAX}= 5A with the measure points connected to the ACL module console.
- I_{MAX}= 20A with the measure points connected to the PODAMP option.

Fig. 3-5 shows that the FCMES uses the internal line L1 that therefore can not be used for any other activity.

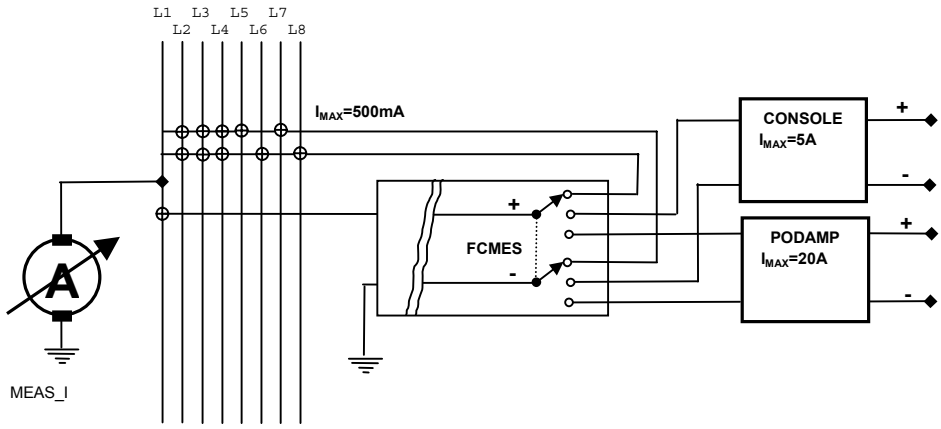

Fig. 3-5 - ACL module: FCMES and PODAMP connections to internal instrument MEAS_I

When the instruction is executed, the values to be measured in the memory are acquired. The results of the measurement are made available to the functional programs when the ~MEAS IMM instruction is executed.

~SET IMM **[MEAS_V=[BUFF|AUTO]| DC|AC|DV_DT|RMS|FFT]**
[MEAS_I=[BUFF|AUTO]| DC|AC|DI_DT|RMS|FFT]
[RANGE_V=NONE|200MVG|500MVG|1VG|2VG|5VG|10VG|2V|5V|10V|20V|50V|100V]
[RANGE_I=NONE|
[500MADC|250MADC|100MADC|50MADC|25MADC|10MADC|5MADC|2P5MADC|1MADC|
500UADC|250UADC|100UADC|50UADC|25UADC|10UADC|5UADC|2P5UADC|1UADC 20V|
500MAAC|250MAAC|100MAAC|50MAAC|25MAAC|10MAAC|5MAAC|2P5MAAC|1MAAC|
500UAAC|250UAAC|100UAAC|50UAAC|25UAAC|10UAAC]|
[5A|2P5A|1A|500MA|250MA|100MA|50MA|25MA10MA|5MA|2P5MA|1MA500UA|250UA|100UA|50UA|25UA|10UA|5UA|2P5UA|1UA|60MV]|[25A|10A]
[RANGE_V2=
100VDC|50VDC|20VDC|10VDC|5VDC|1VDC|500MVDC|200MVDC|10VAC|5VAC|2VAC]
[MODE=NORMAL|DEBUG|PROCESS] [INP_MEM=MEMORY|CHANNEL|ADC|INPUT]
[**N_SAMPLE=**value] [**FREQ=***value*] [**ADDR=***value*]
[START=IMMEDIATE|CNT_START|CNT_STOP|CNT_COMP|HW1|HW2|SW1|DISABLE]
[TRIG_OUT=NONE|SW1|SW2] [**DELAY_TRIG=**value] [**EVOLUTION=***value*]
[INP_VPOS=OPEN|L1|L2|L4|L6|GND|MONITOR|IDRA|IDRB|IDRC|TEMP]
[INP_VNEG=OPEN|L1|L2|L3|L4|L5|L7|GND]
[INP_I_V2=NONE|L1_I|L1_V| L2_AMP|L3_AMP| L4_AMP|L6_AMP|L8_AMP|POD|CON]
[SENSE_I=INTERNAL|L5]
[REF_I=GND|L3|L7|| L2_AMP|L3_AMP| L4_AMP|L5_AMP|L7_AMP]
[FILTER=
NONE|PB_BW|PA_BW|PB_C1|PA_C2|MM|PB_FH|PA_FH|PBD_FH|BR_FH|PB_FB|PA_FB|
PBD_FB|BR_FB]
[**ORDER=***value*] [**FT1=***value*] [**FT2=***value*] **[DOMAIN=IMM|PC|ALL]**;

MEAS_V=*option* **[[BUFF|AUTO]| DC|AC|DV_DT|RMS|FFT|ONE_SHOT|NONE,**
default: [BUFF|AUTO]

This indicates the type of measurements that will be performed with the voltage meter (MEAS_V). The parameter may have one, several of none of the listed values:

[BUFF|AUTO] The measurement is performed and the data is stored in a 64Kbyte buffer in the ACL module. (internal addresses: 0x960000÷0x96FFFF).

DC When the measurement is performed, the maximum, minimum and mean values for the DC measurements are calculated.

AC When the measurement is performed, the peak, peak to peak and offset values for the AC measurements are calculated.

DV_DT When the measurement is performed, the ΔV/ΔT value, representing the linear regression curve slope on the value of the acquired samples is also calculated.

RMS When the measurement is performed, the Vrms value for the AC measurements is also calculated.

FFT When the measurement is performed, the module and phase values of the harmonic components of the acquired signal are calculated. The calculation is effected by performing an FFT analysis on the vector of the acquired samples. The results of the calculation will be inserted in two vectors containing the module and phase of the harmonic components.

ONE_SHOT An instant measurement is performed, i.e. only one sample is generated as if the N_SAMPLE parameter had a value of 1.

NONE No voltage measurement is performed, the **~SET IMM** instruction is executed to program the instruments and generate a trigger signal.

MEAS_I=*option* **[[BUFF|AUTO]| DC|AC|DI_DT|RMS|FFT|ONE_SHOT|NONE,**
default: [BUFF|AUTO]

This indicates the type of measurements that will be performed with the voltage meter (MEAS_I). The parameter may have one, several of none of the listed values:

BUFF|AUTO The measurement is performed and the data is stored in a 64Kbyte buffer in the ACL module. (internal addresses: 0x970000÷0x97FFFF).

DC When the measurement is performed, the maximum, minimum and mean values for the DC measurements are calculated.

AC When the measurement is performed, the peak, peak to peak and offset values for the AC measurements are calculated.

DI_DT When the measurement is performed, the ΔI/ΔT value, representing the linear regression curve slope on the value of the acquired samples is also calculated.

RMS When the measurement is performed, the Irms value for the AC measurements is also calculated.

FFT When the measurement is performed, the module and phase values of the harmonic components of the acquired signal are calculated. The calculation is effected by performing an FFT analysis on the vector of the acquired samples. The results of the calculation will be inserted in two vectors containing the module and phase of the harmonic components.

ONE_SHOT An instant measurement is performed, i.e. only one sample is generated as if the N_SAMPLE parameter had a value of 1.

NONE No current measurement is performed, the **~SET IMM** instruction is executed to program the instruments and generate a trigger signal.

RANGE_V=*option|value* **[NONE|200MVG|500MVG|1VG|2VG|5VG|10VG|2V|5V|10V|20V|50V|100V, default: 10VG]**

This indicates the signal range that requires measuring with MEAS_V set to measure voltage values or a full scale value of the instrument that contains the value to be measured. The closer the full scale value is to the measured value, then the more accurate instrument resolution will be. The parameter has thirteen possible values:

NONE | 0 This indicates that the MEAS_V instrument is disconnected: no measure will be executed.

200MVG | 1 The instrument is set for measurement of ±0.2V with input impedance > 1GΩ.

500MVG | 2 The instrument is set for measurement of ±0.5V with input impedance > 1GΩ.

1VG | 3 The instrument is set for measurement of ±1V with input impedance > 1GΩ.

2VG | 4 The instrument is set for measurement of ±2V with input impedance > 1GΩ.

5VG | 5 The instrument is set for measurement of ±5V with input impedance > 1GΩ.

10VG | 6 The instrument is set for measurement of ±10V with input impedance > 1GΩ.

2V | 7 The instrument is set for measurement of ±2V with input impedance of 1MΩ and 50pF.

5V | 8 The instrument is set for measurement of ±5V with input impedance of 1MΩ and 50pF.

10V | 9 The instrument is set for measurement of ±10V with input impedance of 1MΩ and 50pF.

20V | 10 The instrument is set for measurement of ±20V with input impedance of 1MΩ and 50pF.

50V | 11 The instrument is set for measurement of ±50V with input impedance of 1MΩ and 50pF.

100V | 12 The instrument is set for measurement of ±100V with input impedance of 1MΩ and 50pF.

For values included between 200VMG and 10VG, the input amplifier of the instrument will be programmed with a Common Mode Voltage[2] of ±10V.
For values included between 2V and 100V, the input amplifier of the instrument will be programmed with a Common Mode Voltage of ±100V.

RANGE_I=*option|value* **[NONE|500MADC|250MADC|100MADC|50MADC|25MADC|10MADC|5MADC|2P5MADC|1MADC|500UADC|250UADC|100UADC|50UADC|25UADC|10UADC|5UADC|2P5UADC|1UADC|500MAAC|250MAAC|100MAAC|50MAAC|25MAAC|10MAAC|5MAAC|2P5MAAC|1MAAC|500UAAC|250UAAC|100UAAC|50UAAC|25UAAC|10UAAC, default: NONE]**

This indicates the signal range that requires measuring with MEAS_I set to measure current values or a full scale value of the instrument that contains the value to be measured. The closer the full scale value is to the measured value, then the more accurate instrument resolution will be. The parameter can have the following possible values:

NONE | 0X50 This indicates that the meter is in closed loop, i.e. the ammeter has shunt resistance of 0 or does not perform any measurement.
500MADC | 0X00 The instrument is set for measurement of ±500mA DC/AC.
250MADC | 0X01 The instrument is set for measurement of ±250mA DC/AC.
100MADC | 0X02 The instrument is set for measurement of ±100mA DC/AC.

50MADC | 0X10 The instrument is set for measurement of ±50mA DC.
25MADC | 0X11 The instrument is set for measurement of ±25mA DC.
10MADC | 0X12 The instrument is set for measurement of ±10mA DC.
5MADC | 0X20 The instrument is set for measurement of ±5mA DC.
2P5MADC | 0X21 The instrument is set for measurement of ±2.5mA DC.
1MADC | 0X22 The instrument is set for measurement of ±1mA DC.
500UADC | 0X30 The instrument is set for measurement of ±500µA DC.
250UADC | 0X31 The instrument is set for measurement of ±250µA DC.
100UADC | 0X32 The instrument is set for measurement of ±100µA DC.
50UADC | 0X40 The instrument is set for measurement of ±50µA DC.
25UADC | 0X41 The instrument is set for measurement of ±25µA DC.
10UADC | 0X42 The instrument is set for measurement of ±10µA DC.
5UADC | 0X43 The instrument is set for measurement of ±5µA DC.
2P5UADC | 0X44 The instrument is set for measurement of ±2.5µA DC.
1UADC | 0X45 The instrument is set for measurement of ±1µA DC.
500MAAC | 0X00 The instrument is set for measurement of ±500mA DC/AC.
250MAAC | 0X01 The instrument is set for measurement of ±250mA DC/AC.
100MAAC | 0X02 The instrument is set for measurement of ±100mA DC/AC.
50MAAC | 0X03 The instrument is set for measurement of ±50mA AC.
25MAAC | 0X04 The instrument is set for measurement of ±25mA AC.
10MAAC | 0X05 The instrument is set for measurement of ±10mA AC.
5MAAC | 0X13 The instrument is set for measurement of ±5mA AC.
2P5MAAC | 0X14 The instrument is set for measurement of ±2.5mA AC.
1MAAC | 0X15 The instrument is set for measurement of ±1mA AC.
500UAAC | 0X23 The instrument is set for measurement of ±500µA AC.
250UAAC | 0X24 The instrument is set for measurement of ±250µA AC.
100UAAC | 0X25 The instrument is set for measurement of ±100µA AC.
50UAAC | 0X33 The instrument is set for measurement of ±50µA AC.
25UAAC | 0X34 The instrument is set for measurement of ±25µA AC.
10UAAC | 0X35 The instrument is set for measurement of ±10µA AC.

For current measurements the input pole is line L1 whereas the output pole is defined by the value of the REF_I parameter

RANGE_I[3]=*option|value* **[5A|2P5A|1A|500MA|250MA|100MA|50MA|25MA10MA|5MA|2P5MA|1MA**

[2] The Common Mode Voltage indicates the maximum voltage value that is possibile to apply to the two differential inputs of the MEAS_V instrument, with respect to the system GND
[3] RANGE_I values valid only if the FCMES option is present in the system.

500UA|250UA|100UA|50UA|25UA|10UA|5UA|2P5UA|1UA|60MV, default: NONE]

This group of values for the RANGE_I parameter is valid only if the FCMES option is present in the system:

5A | 0X70	The instrument is set for measurement of ±5A DC.
2P5A | 0X71	The instrument is set for measurement of ±2,5A DC.
1A | 0X72	The instrument is set for measurement of ±1A DC.
500MA | 0X80	The instrument is set for measurement of ±500mA DC.
250MA | 0X81	The instrument is set for measurement of ±250mA DC.
100MA | 0X82	The instrument is set for measurement of ±100mA DC.
50MA | 0X90	The instrument is set for measurement of ±50mA DC.
25MA | 0X91	The instrument is set for measurement of ±25mA DC.
10MA | 0X92	The instrument is set for measurement of ±10mA DC.
5MA | 0XA0	The instrument is set for measurement of ±5mA DC.
2P5MA | 0XA1	The instrument is set for measurement of ±2,5mA DC.
1MA | 0XA2	The instrument is set for measurement of ±1mA DC.
500UA | 0XB0	The instrument is set for measurement of ±0,50mA DC.
250UA | 0XB1	The instrument is set for measurement of ±0,25mA DC.
100UA | 0XB2	The instrument is set for measurement of ±0,1mA DC.
50UA | 0XC0	The instrument is set for measurement of ±50µA DC.
25UA | 0XC1	The instrument is set for measurement of ±25µA DC.
10UA | 0XC2	The instrument is set for measurement of ±10µA DC.
5UA | 0XD0	The instrument is set for measurement of ±5µA DC/AC.
2P5UA | 0XD1	The instrument is set for measurement of ±2,5µA DC.
1UA | 0XD2	The instrument is set for measurement of ±1µA DC.
60MV | 0XE0	This value is used only when the user needs to define a full scale that is different from the ones listed above. The user can set a custom shunt with the ~SET SHUNT instruction. See the ~SET SHUNT instruction for more details.

In the current measurements, with the FCMES option, the two meter poles can be connected either to the system analogical lines or to the console of the FCMES option.

RANGE_I[4]**=***option|value* **[25A|10A]**

This group of values, adoptable by the RANGE_I parameter, become significant only in presence of the PODAMP option connected to the FCMES option:

25A | 0X60	The instrument is set for measurement of ±25A DC.
10A | 0X61	The instrument is set for measurement of ±10A DC.

In the current measurements, with the PODAMP connected to the FCMES, the two meter poles are on the PODAMP.

RANGE_I[5]**/RANGE_V2=***option|value*

[NONE|100VDC|50VDC|20VDC|10VDC|5VDC|2VDC|1VDC|500MVDC|200MVDC|100VAC|50VAC|20VAC|10VAC|5VAC|2VAC|, default: NONE]

This indicates the signal range that requires measuring with MEAS_I set to measure voltage values or a full scale value of the instrument that contains the value to be measured. The closer the full scale value is to the measured value, then the more accurate instrument resolution will be. The parameter has thirteen possible values:

NONE | 0X50	This indicates that the meter does not perform any measurement.
100VDC | 0X30	The instrument is set for measurement of ±100V with input impedance of 200KΩ.
50VDC | 0X31	The instrument is set for measurement of ±50V with input impedance of 200KΩ.

[4] RANGE_I values valid only if the PODAMP option is connected to the FCMES.

[5] RANGE_I valus valid only when using the MEAS_I instrument as a voltage meter, that is with the parameter INP_I_V2=L1_V. RANGE_V2 is an alias of RANGE_I.

20VDC | 0X32 The instrument is set for measurement of ±20V with input impedance of 200KΩ.

10VDC | 0X40 The instrument is set for measurement of ±10V with input impedance of 200KΩ.

5VDC | 0X41 The instrument is set for measurement of ±5V with input impedance of 200KΩ.

2VDC | 0X42 The instrument is set for measurement of ±2V with input impedance of 200KΩ.

1VDC | 0X43 The instrument is set for measurement of ±1V with input impedance of 200KΩ.

500MVDC | 0X44 The instrument is set for measurement of ±0.5V with input impedance of 200KΩ.

200MVDC | 0X45 The instrument is set for measurement of ±0.2V with input impedance of 200KΩ.

100VAC | 0X23 The instrument is set for measurement of ±100V AC with input impedance of 200KΩ.

50VAC | 0X24 The instrument is set for measurement of ±50V AC with input impedance of 200KΩ.

20VAC | 0X25 The instrument is set for measurement of ±20V AC with input impedance of 200KΩ.

10VAC | 0X33 The instrument is set for measurement of ±10V AC with input impedance of 200KΩ.

5VAC | 0X34 The instrument is set for measurement of ±5V AC with input impedance of 200KΩ.

2VAC | 0X35 The instrument is set for measurement of ±2V AC with input impedance of 200KΩ.

For voltage measurements the input pole is line L1 with a series-connected 200KΩ resistor whereas the output pole is defined by the value of the REF_I parameter

MODE=*option|value* **[NORMAL|DEBUG|PROCES, default: NORMAL]**

This defines the execution mode of the measurement performed with the IMM instrument. The parameter has three possible values:

NORMAL | 0 This defines the normal operating mode of the instrument. Data acquisition starts after the trigger event for the start of measurement and the delay set with the DELAY_TRIG parameter. The acquired data will be processes in the mode defined by parameters MEAS_V and MEAS_I.

DEBUG | 16 This operates in the same way as NORMAL mode but data acquisition also occurs during the delay time set with the DELAY_TRIG parameter.

PROCES | 4 The instrument processes the data in the memory buffers without acquiring other data. The data in the memory buffer is the data acquired in a previous measurement.

INP_MEM=*option* **[MEMORY|CHANNEL|ADC|INPUT, default: ADC]**

This defines the source of data inserted in the memory acquisition buffers. The first 14 bits (bit 0÷13) come from the AD Converter which digitizes the analogical values received from the meter measure points.The source of the two last bits (bit 14 and 15) can be selected according to the INP_MEM parameter value. The parameter has four possible values:

MEMORY This indicates that the data inserted in the acquisition buffers comes from memory buffers in the DRA and DRB drivers. The data received from the memory buffers in the DRA and DRB drivers is the data that enters the DAC components used to generate analogical output signals by the generators.

CHANNEL This indicates that the data inserted in the acquisition buffers comes from the sensors of the four analogical channels on the ACL module.

ADC	This indicates that the data inserted in the acquisition buffers comes from the ADC component that digitizes the analogical values received from the meter that is connected to the analog measure lines. (overflow flag of the component)
INPUT	This indicates that the data inserted in the acquisition buffers comes from the signals on a connector installed on the ACL module (JT0, JT1, JT2 and JT3).

N_SAMPLE=*value*

[0÷65,535, default: 1000]
This indicates the number of samples to be acquired for measurement. For the value to assign to this parameter, it is important to bear in mind that to acquire a full input signal cycle, the number of samples to acquire must be higher than the sampling frequency and input signal frequency ratio.

FREQ=*value*

[1000Hz÷10.000.000Hz, default: 100,000Hz]
This indicates the sampling frequency value for digitization of the acquired signal. For the value to assign to this parameter, it is important to bear in mind that the sampling frequency must be higher than double the input signal frequency. The recommended value for sampling frequency is five/ten times the input frequency.

ADDR=*value*

[0÷65,535, default: 0]
This indicates the start address in the memory used for acquisition of the signal of the buffer that will contain the acquired values.

START=*option|value*

[IMMEDIATE|CNT_START|CNT_STOP|CNT_COMPHW1|HW2|SW1| DISABLE, default:IMMEDIATE]
This indicates the start method for measurement performance. The parameter has seven possible values:

IMMEDIATE | 0	This indicates that the measurement will be performed immediately when the **~SET IMM** instruction is executed.
CNT_START | 1	This indicates that measuring will start when the "Start Trigger" event on the SCOUNTER instrument on the ACL module occurs.
CNT_STOP | 2	This indicates that measuring will start when the "Stop Trigger" event on the SCOUNTER instrument on the ACL module occurs.
CNT_COMP | 3	This indicates that measuring will start when the "Compare" event on the SCOUNTER instrument on the ACL module occurs.
HW1 | 4	Indicates that measuring will start when the HWRTCIN1 signal from outside the ACL module is activated.
HW2 | 5	Indicates that measuring will start when the HWRTCIN2 signal from outside the ACL module is activated.
SW1 | 6	Indicates that generation of the output signal will start when the "Trigger SW1" event that can be generated by the IMM and SCOUNTER instruments occurs.
DISABLE | 7	This indicates that the driver will be programmed without starting measuring. To start measuring, a ~SET IMM instruction must be executed when the value assigned to the START parameter is not DISABLE.

TRIG_OUT=*option|value*

[NONE|SW1|SW2, default:NONE]
This defines the type of trigger signal generated for synchronization with other instruments.
The parameter has three possible values:

NONE | 0	No trigger signal is generated
SW1 | 1	The SW1 software trigger signal is generated, synchronous with the start of the measurement.

SW2 | 2 SW2 indicates the possibility of generating a second SW2 software trigger signal. This function is not yet in use.

DELAY_TRIG=*value* **[0.00000002÷6Osec, default: 0]**
The parameter has got a different meaning according to the MODE parameter value:

If MODE is equal to NORMAL, DELAY_TRIG indicates the delay (in seconds) programmed from the start of measuring trigger event as defined by the START parameter and measurement performance.
If MODE is equal to DEBUG, DELAY_TRIG indicates the number of samples previously acquired before the effective samples used to calculate the measure.
If MODE is equal to PROCESS, DELAY_TRIG has no effect.

EVOLUTION=*value* **[0÷65,535, default: 1]**
This indicates the number of acquisitions that will be effected for measurement performance.

INP_VPOS=*option|value* **[OPEN|L1|L2|L4|L6|GND|MONITOR|IDRA|IDRB|IDRC|TEMP, default:OPEN]**
This defines the connection to the positive pole of MEAS_V, used for voltage measurements. It may have the following values:

OPEN | 0 The positive pole is not connected.
L1 | 1 The positive pole is connected to internal measure line L1.
L2 | 2 The positive pole is connected to internal measure line L2.
L4 | 4 The positive pole is connected to internal measure line L4.
L6 | 6 The positive pole is connected to internal measure line L6.
GND | 9 The positive pole is connected to the ACL module ground line.
MONITOR | 10 The positive pole is connected to the measure point, defined with the **~SET MONITOR** instruction that is used to select the point that will be monitored by the instrument.
IDRA | 11 The positive pole is internally connected to the output of the DRA generator supplied current monitor.
IDRB | 12 The positive pole is internally connected to the output of the DRB generator supplied current monitor.
IDRC | 13 The positive pole is internally connected to the output of the DRC generator supplied current monitor.
TEMP | 14 The positive pole is connected internally to the temperature sensor of the dissipator on the ACL module.

INP_VNEG=*option|value* **[OPEN|L1|L2|L3|L4|L5|L7|GND, default:OPEN]**
This defines the connection to the negative pole of MEAS_V, used for voltage measurements. It may have the following values:

OPEN | 0 The negative pole is not connected.
L1 | 1 The negative pole is connected to internal measure line L1.
L2 | 2 The negative pole is connected to internal measure line L2.
L3 | 3 The negative pole is connected to internal measure line L3.
L4 | 4 The negative pole is connected to internal measure line L4.
L5 | 5 The negative pole is connected to internal measure line L5.
L7 | 7 The negative pole is connected to internal measure line L7.
GND | 9 The positive pole is connected to the ACL module ground line.

INP_I_V2=*option|value* **[OPEN|L1_I|L1_V|L2_AMP|L3_AMP| L4_AMP|L6_AMP|L8_AMP|POD|CON, default:OPEN]**
This defines the INP_I_V2 terminal connection on MEAS_I. It may have the following values:

OPEN | 0 The INP_I_V2 point is not connected.

L1_I | 1 The INP_I_V2 point is connected to internal measure line L1 for current measurements.

L1_V | 2 The INP_I_V2 point is connected to internal measure line L1 for voltage measurements with input impedance of 200KÙ.

L2_AMP | 2 INP_I_V2 pole is connected to the internal measure line L2 through FCMES option, for current measurements. Value L2_AMP is valid only for RANGE_I >= 0x60 values

L3_AMP | 3 INP_I_V2 pole is connected to the internal measure line L3 through FCMES option, for current measurements. Value L3_AMP is valid only for RANGE_I >= 0x60 values

L4_AMP | 4 INP_I_V2 pole is connected to the internal measure line L4 through FCMES option, for current measurements. Value L4_AMP is valid only for RANGE_I >= 0x60 values

L6_AMP | 6 INP_I_V2 pole is connected to the internal measure line L6 through FCMES option, for current measurements. Value L6_AMP is valid only for RANGE_I >= 0x60 values

L8_AMP | 8 INP_I_V2 pole is connected to the internal measure line L8 through FCMES option, for current measurements. Value L8_AMP is valid only for RANGE_I >= 0x60 values

POD | 11 INP_I_V2 pole is connected to the positive measuring point of PODAMP option through FCMES option, for current measurements. Value POD is valid only for RANGE_I >= 0x60 values

CON | 12 INP_I_V2 pole is connected to the positive measuring point situated on the FCMES option, for current measurements. Value POD is valid only for RANGE_I >= 0x60 values

SENSE_I=*option|value* **[INTERNAL|L5, default:INTERNAL]**

This defines the sense point connection for input current (SENSE_I). The parameter may have the following values:

INTERNAL | 0 The SENSE_I point is internally connected to line L1.

L5 | 1 The SENSE_I point is internally connected to line L5.

REF_I=*option|value* **[GND|L3|L7| L2_AMP|L3_AMP| L4_AMP|L5_AMP|L7_AMP, default:GND]**

This defines the REF_I point connection on MEAS_I. It may have the following values:

GND | 0 The REF_I point is connected to the ACL module ground line.

L3 | 3 The REF_I_I point is connected to internal measure line L3.

L7 | 7 The REF_I point is connected to internal measure line L7.

L2_AMP | 2 INP_I_V2 pole is connected to the internal measure line L2 through FCMES option, for current measurements. Value L2_AMP is valid only for RANGE_I >= 0x60 values

L3_AMP | 3 INP_I_V2 pole is connected to the internal measure line L3 through FCMES option, for current measurements. Value L3_AMP is valid only for RANGE_I >= 0x60 values

L4_AMP | 4 INP_I_V2 pole is connected to the internal measure line L4 through FCMES option, for current measurements. Value L4_AMP is valid only for RANGE_I >= 0x60 values

L5_AMP | 5 INP_I_V2 pole is connected to the internal measure line L5 through FCMES option, for current measurements. Value L5_AMP is valid only for RANGE_I >= 0x60 values

L7_AMP | 7 INP_I_V2 pole is connected to the internal measure line L7 through FCMES option, for current measurements. Value L7_AMP is valid only for RANGE_I >= 0x60 values

FILTER=*option|value* **[NONE|PB_BW|PA_BW|PB_C1|PA_C2|MM|PB_FH|PA_FH|PBD_FH|BR_FH|**

PB_FB|PA_FB|PBD_FB|BR_FB, default:NONE|0]
This defines the type of digital filter that will be applied on the two buffers containing the acquired voltage and current value vectors. The results will be available in two vectors that will contain the values filtered with the selected filter type. The maximum dimensions of the filtered vectors is 16 Kwords. When a filter is applied, the calculations defined with the parameters MEAS_V and MEAS_I are performed by reading the data from the filtered vectors and not the acquisition buffers.
The parameter may have the following values:

NONE | 0	No filter is applied to the two acquisition buffers.
PB_BW | 1	The acquisition buffers are filtered with a Butterworth Low Pass filter.
PA_BW | 2	The acquisition buffers are filtered with a Butterworth High Pass filter.
PB_C1 | 3	The acquisition buffers are filtered with a Chebyshev type 1 Low Pass filter.
PA_C2 | 4	The acquisition buffers are filtered with a Chebyshev type 1 High Pass filter.
MM | 5	The buffers with the filtered values will contain the moving mean of the acquired values. The number of samples used to calculate the moving mean is determined by the value of parameter FT1. When the FILTER parameter has a value of "MM", the FT1 parameter will indicate an integer and not a frequency value
PB_FH | 6	The acquisition buffers are filtered with a Hamming Fir low pass filter.
PA_FH | 7	The acquisition buffers are filtered with a Hamming Fir high pass filter.
PBD_FH | 8	The acquisition buffers are filtered with a Hamming Fir band pass filter.
BR_FH | 9	The acquisition buffers are filtered with a Hamming Fir band stop filter.
PB_FB | 10	The acquisition buffers are filtered with a Blackman Fir low pass filter.
PA_FB | 11	The acquisition buffers are filtered with a Blackman Fir high pass filter.
PBD_FB | 12	The acquisition buffers are filtered with a Blackman Fir band pass filter.
BR_FB | 13	The acquisition buffers are filtered with a Blackman Fir band stop filter.

ORDER=*value*

[0÷20, default: 10]
This indicates the order number of the filter. In other words, it indicates the attenuation speed when going from the pass band to the attenuated band of the filter.

FT1=*value*

[0÷100.000Hz, default: 0]
This indicates the first cut frequency for the type of filter defined with the FILTER parameter. When the FILTER parameter has a value of "MM", the FT1 parameter will indicate an integer that identifies the number of samples used to calculate the moving mean and not a frequency value.

FT2=*value*

[0÷100.000Hz, default: 0]
This indicates the second cut frequency for the type of filter defined with the FILTER parameter.

DOMAIN=*option|value*

[IMM|PC|ALL, default: IMM]
This parameter synchronizes program execution according to the status of the ACL module, IMM instrument or neither of the two.
The parameter may have the following values:

IMM | 0 indicates that the ACL module will assume control and will relinquish it at the end of measuring.

PC | 1 indicates that the Main Computer will remain in control without waiting for the end of program execution of DRB or all instruments.

ALL | 2 indicates that the ACL module will assume control and will relinquish it at the end of program execution of all instruments.

The default value for the DOMAIN parameter is IMM.

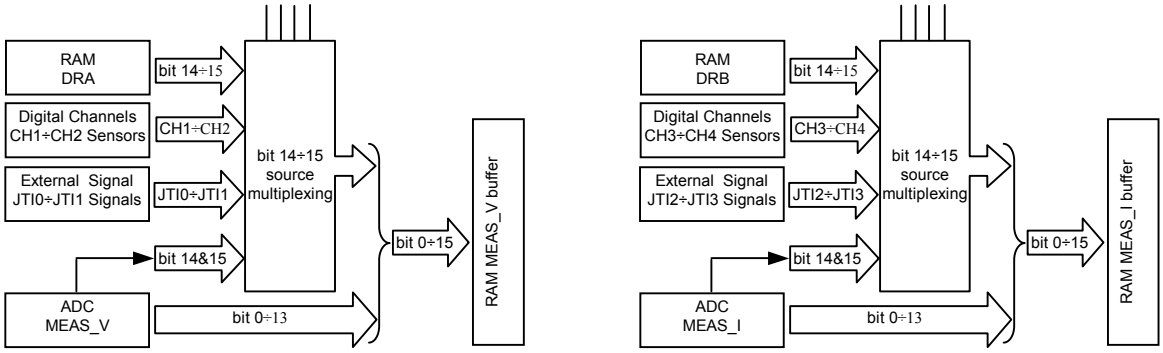

Fig. 3-6 - ACL module: Data source for MEAS_V and MEAS_I buffers

3.5.2 ~MEAS IMM

The ~MEAS IMM instruction is used in functional programs to make the measurements performed with the IMM instrument available.

~MEAS IMM [**INTO=***variable*] [**N_SAMPLE=***value*] [**ADDR=***value*] [**MEAS=***option*|*value*]

INTO= *variable* Indicates the variable that the measured value will be inserted in. If no variable is indicated, the measurement results are inserted in the AR variable.

N_SAMPLE =*value* **[0÷1.000, default: 1]**
This indicates the number of samples to be transferred from the acquisition buffer for measuring.

ADDR=*value* **[0÷65,535, default: 0]**
This indicates the start address in the memory used for acquisition of the signal of the buffer that will contain the acquired values.

MEAS=*option*|*value* **[IST_I|IST_V|IST_V2|MAX_V|MIN_V|AVERAGE_V|RMS_V|P_V|PP_V|OFFSET_V|DV_DT|MAX_I|MIN_I|AVERAGE_I|RMS_I|P_I|PP_I|OFFSET_I|DI_DT|MAX_V2|MIN_V2|AVERAGE_V2|RMS_V2|P_V2|PP_V2|OFFSET_V2|DV2_DT|PHASE_V2|MODULE_V2|BUFFER_V|BUFFER_I|BUFFER_V2|MODULE_V|PHASE_V|MODULE_I|PHASE_I|VECT_VF|VECT_IF|REL_DRA|REL-DRB|REL_DRC|REL_MESVP|REL_MESVM|REL_MESI|REL_MESI_REF|REL_GND|REL_PULL default:IST_I]**
This defines the type of measurement performed by the instrument. To speed up the measurement time, the values assigned to the parameter must be consistent with the values assigned to parameters MEAS_V and MEAS_I in the ~SET IMM instruction

that was used for measurement acquisition. The parameter may have the following values:

IST_I | 0	Instant measurement of the current is given in Amps. The previous ~SET IMM instruction must be executed with the MEAS_I=ONE_SHOT parameter.
IST_V2 | 0	MEAS_I instruments gives the instant measurement of the voltage in Volts if the previous ~SET IMM instruction has been executed with the parameters INP_I_V2=L1_V and MEAS_I=ONE_SHOT.
IST_V | 1	Instant measurement of the voltage is given in Volts. The previous ~SET IMM instruction must be executed with the MEAS_V=ONE_SHOT parameter.
MAX_V | 2	Measurement of the maximum acquired voltage value is given in Volts. The previous ~SET IMM instruction must be executed with the MEAS_V=DC parameter.
MIN_V | 3	Measurement of the minimum voltage value is given in Volts. The previous ~SET IMM instruction must be executed with the MEAS_V=DC parameter.
AVERAGE_V | 4	Measurement of the average value of the acquired voltage values is given in Volts. The previous ~SET IMM instruction must be executed with the MEAS_V=DC parameter.
RMS_V | 5	Measurement of the Vrms voltage value of the measured signal is given in Volts. The previous ~SET IMM instruction must be executed with the MEAS_V=AC parameter.
P_V | 6	Measurement of the peak voltage value of the measured signal is given in Volts. The previous ~SET IMM instruction must be executed with the MEAS_V=AC parameter.
PP_V | 7	Measurement of the peak to peak voltage value of the measured signal is given in Volts. The previous ~SET IMM instruction must be executed with the MEAS_V=AC parameter.
OFFSET_V | 8	Measurement of the offset value of the measured signal is given in Volts. The previous ~SET IMM instruction must be executed with the MEAS_V=AC parameter.
DV_DT | 9	Measurement of the $\Delta V/\Delta T$ value, representing the linear regression curve slope on the value of the acquired samples is given in Volts/sec. The previous ~SET IMM instruction must be executed with the MEAS_I=DV_DT parameter.
MAX_I | 10	Measurement of the maximum acquired current value is given in Amps. The previous ~SET IMM instruction must be executed with the MEAS_I=DC parameter.
MIN_I | 11	Measurement of the minimum acquired current value is given in Amps. The previous ~SET IMM instruction must be executed with the MEAS_I=DC parameter.
AVERAGE_I | 12	Measurement of the average value of the acquired current values is given in Amps. The previous ~SET IMM instruction must be executed with the MEAS_I=DC parameter.
RMS_I | 13	Measurement of the Vrms current value of the measured signal is given in Amps. The previous ~SET IMM instruction must be executed with the MEAS_I=AC parameter.
P_I | 14	Measurement of the peak current value of the measured signal is given in Amps. The previous ~SET IMM instruction must be executed with the MEAS_I=AC parameter.

PP_I | 15	Measurement of the peak to peak current value of the measured signal is given in Amps. The previous ~SET IMM instruction must be executed with the MEAS_I=AC parameter.
OFFSET_I | 16	Measurement of the offset value of the measured signal is given in Amps. The previous ~SET IMM instruction must be executed with the MEAS_I=AC parameter.
DI_DT | 17	Measurement of the ΔV/ΔT value, representing the linear regression curve slope on the value of the acquired samples is given in Amps/sec. The previous ~SET IMM instruction must be executed with the MEAS_I=DI_DT parameter.
MAX_V2 | 10	The MEAS_I instrument gives the maximum acquired voltage in Volts, if the previous ~SET IMM instruction has been executed with the parameters INP_I_V2=L1_V and MEAS_V=DC.
MIN_V2 | 11	The MEAS_I instrument gives the minimum voltage value in Volts, if the previous ~SET IMM instruction has been executed with the parameters INP_I_V2=L1_V and MEAS_V=DC.
AVERAGE_V2 | 12	The MEAS_I instrument gives the average value of the voltage values, if the previous ~SET IMM instruction has been executed with the parameters INP_I_V2=L1_V and MEAS_V=DC.
RMS_V2 | 13	The MEAS_I instrument gives the Vrms voltage value of the signal measured in Volts, if the previous ~SET IMM instruction has been executed with the parameters INP_I_V2=L1_V and MEAS_V=AC.
P_V2 | 14	The MEAS_I instrument gives the peak voltage value of the signal measured in Volts, if the previous ~SET IMM instruction has been executed with the parameters INP_I_V2=L1_V and MEAS_V=AC.
PP_V2 | 15	The MEAS_I instrument gives the peak to peak voltage value of the signal measured in Volts, if the previous ~SET IMM instruction has been executed with the parameters INP_I_V2=L1_V and MEAS_V=AC.
OFFSET_V2 | 16	The MEAS_I instrument gives the offset value of the signal measured in Volts, if the previous ~SET IMM instruction has been executed with the parameters INP_I_V2=L1_V and MEAS_V=AC.
DV2_DT | 17	The MEAS_I instrument gives the ΔV2/ΔT value, representing the linear regression curve slope on the value of the acquired samples is given in Volt/sec. The value is given if the previous ~SET IMM instruction has been executed with the parameters INP_I_V2=L1_V and MEAS_I=DV_DT.
PHASE_V2 | 22	The MEAS_I instruments gives a buffer containing the phase values of the harmonic components. These values are referred to the voltage values of the acquired signal expressed in degrees. The values in the buffer are given, if the previous ~SET IMM instruction has been executed with the INP_I_V2=L1_V parameter.
MODULE_V2 | 23	The MEAS_I instruments gives a buffer containing the module values of the harmonic components of the acquired signal in Amps. The values are given, if the previous ~SET IMM instruction has been executed with the INP_I_V2=L1_V parameter.
BUFFER_V | 18	The buffer containing the acquired voltage values is given in Volts.
BUFFER_I | 19	The buffer containing the acquired current values is given in Amps.

BUFFER_V2 | 26	The MEAS_I instruments gives a buffer containing the acquired voltage values in Volts. The values are given, if the previous ~SET IMM instruction has been executed with the INP_I_V2=L1_V parameter.
MODULE_V | 20	The buffer containing the module values of the harmonic components of the acquired signal is given in Volts.
PHASE_V | 21	The buffer containing the phase values of the harmonic components of the voltage values of the acquired signal is given in degrees.
MODULE_I | 22	The buffer containing the module values of the harmonic components of the acquired signal is given in Amps.
PHASE_I | 23	The buffer containing the phase values of the harmonic components of the current values of the acquired signal is given in degrees.
VECT_VF | 24	The buffer containing the acquired voltage values filtered with the filter defined with the "FILTER" parameter is given in Volts.
VECT_IF | 25	The buffer containing the acquired current values filtered with the filter defined with the "FILTER" parameter is given in Amps.
REL_DRA | 200	The connection status of the DRA instrument relays is given. This function is not yet in use.
REL_DRB | 201	The connection status of the DRB instrument relays is given. This function is not yet in use.
REL_DRC | 202	The connection status of the DRC instrument relays is given. This function is not yet in use.
REL_MESVP | 203	The connection status of the relays of the MEAS_V instrument positive pole is given. This function is not yet in use.
REL_MESVM | 204	The connection status of the relays of the MEAS_V instrument negative pole is given. This function is not yet in use.
REL_MESI | 205	The connection status of the relays of the MEAS_I instrument positive pole is given. This function is not yet in use.
REL_MESI_REF|206	The connection status of the relays of the MEAS_I instrument SENSE pole is given. This function is not yet in use.
REL_GND | 207	The connection status of the AGND instrument relays is given. This function is not yet in use.
REL_PULL | 208	The connection status of the PULL instrument relays is given. This function is not yet in use.

3.5.3 ~CLEAR IMM

The ~CLEAR IMM instruction is used in functional programs to disable the IMM instrument by disconnecting it from the measure lines.

~CLEAR IMM;

The ~CLEAR IMM instruction resets the instrument and set its parameters to the default value. Default values are indicated in Appendix A Tab. 4-1.

3.6 SHUNT

A shunt is a parallel resistance which diverts a part of the current circulating in the principal circuit. The entity of the diverted current (Amps) depends on the shunt resistive value (Ohm) compared to the parallel circuit that is constituted by the current meter. In the current meters the shunt is used to increase the instrument full scale. From a commercial point of view, the shunts are indicated with Amps referred to a reference voltage (typically 50/60/100mV). The voltage reference corresponds to the voltage drop on the shunt, where it is connected. On the ACL module, the current meter has an internal resistance that causes a voltage drop of 60mV.
Physically the shunt is a resistor with four pins. Two pins are placed at the resistor ends and sense the current flowing in the circuit. The other two are smaller and are used to read the voltage on the shunt.
On the ACL module the user can insert the shunt on three different measurement points (if the additional options of the current meter are present in the system).
For this instrument there is the **~SET SHUNT** function which can be used from functional programs**.**

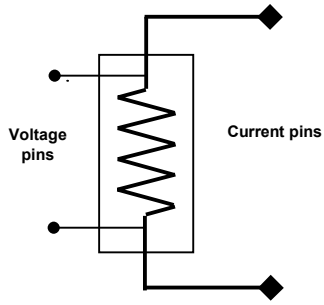

3.6.1 ~SET SHUNT

The ~SET SHUNT instruction is used inside functional programs to set the full scale value of the current meter when option FCMES (and in case also the PODAMP option) is present. The three instruction parameters enables you to define the instrument full scale value for the three measure points available with the options FCMES and PODAMP. In particular:

- with the measure points connected to the system analogical lines.
- with the measure points connected to the FCMES module.
- with the measure points connected to the PODAMP.

~SET SHUNT **[VAL_POD=***value***] [VAL_CON=***value***] [VAL_LINE=***value***]**

VAL_POD= *value* **[0÷2^{32}-1 A, default: 1]**
This defines the instrument full scale value when the measure points are on the PODAMP. This value must be the custom shunt connected to the measure points on the PODAMP.

VAL_CON= *value* **[0÷2^{32}-1 A, default: 1]**
This defines the instrument full scale value when the measure points, are on the FCMES. The value must be the custom shunt connected to the measure points on the FCMES.

VAL_LINE= *value* **[0÷2^{32}-1 A, default: 1]**
This defines the instrument full scale value when the measure points, are on the system analogical lines. The value must be the custom shunt connected to the measure points on the system analogical lines through the FCMES.

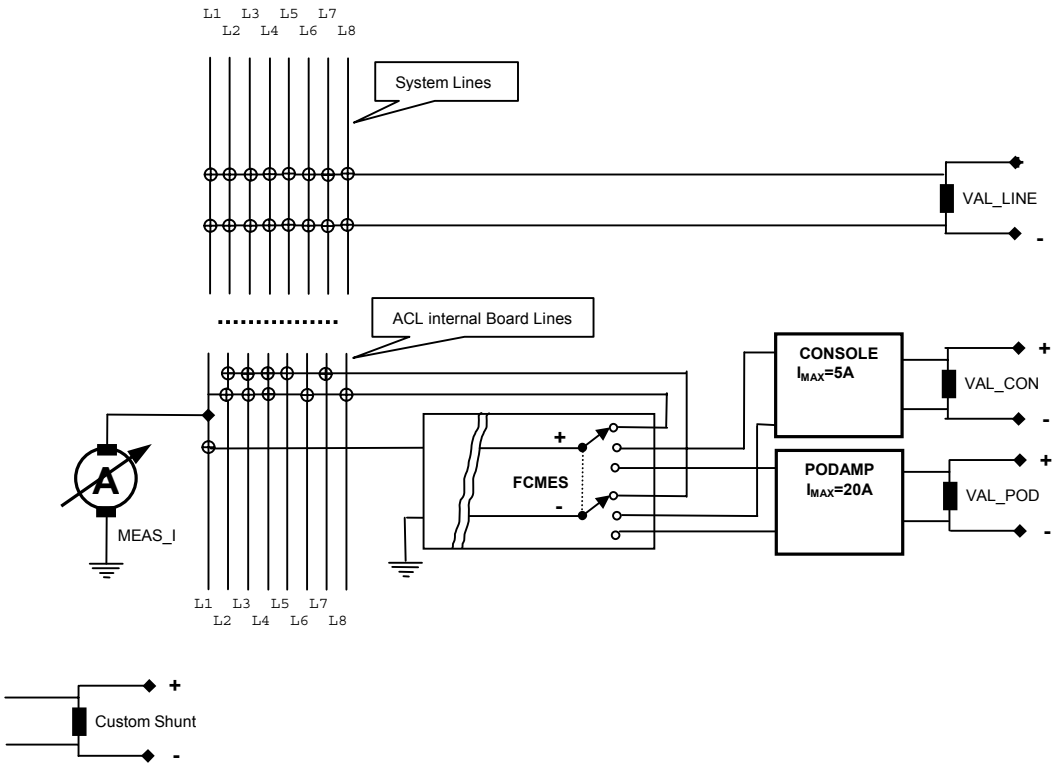

Fig. 3-7 - ACL module: Custom shunt for the current measurement

3.7 Counter/Frequency meter/Timer - SCOUNTER -

The SCOUNTER is an instrument assigned to the ACL module with the following characteristics:

- Two input channels: CHA for the Start Event CHB for the Stop Event
- Programmable thresholds
- Programmable fronts
- High voltage input voltage range (± 10V/± 100V)
- High impedance input (100KΩ/1MΩ)

The functions **~SET SCOUNTER ~MEAS SCOUNTER** and **~CLEAR SCOUNTER** that can be used by functional programs, have been provided for this instrument.

3.7.1 ~SET SCOUNTER

The ~SET SCOUNTER instruction is used in functional programs to program the SCOUNTER instrument to perform measurements: pulses, frequencies and intervals of time.

~SET SCOUNTER
[**VAL=***value*] [**LEVEL_A=***value*] [**LEVEL_B=***value*]
[**SLOPE_A=POS|NEG**] [**SLOPE_B= POS|NEG**]
[INP_A=NONE|L4|L6] [RANGE_A=|10V|100V|10V_50]
[**DELAY_TRIG=**value]
[INP_B=NONE|L2|L8] [RANGE_B=|10V|100V|10V_50]
[[ARM|START]=IMMEDIATE|HW1|HW2|SW1|DISABLE|DISARM]
[**GATE=**value] [**AVERAGE=**value]
[MODE=COUNT|COUNT_B|COUNT_GATE|FREQ|TINT_A|TINT_AB|PERIOD]
[HISTERESIS=AUTO|10NSF|300NS|10US]
[TRIG_OUT=NONE|SW1|SW2]
[DOMAIN=COUNTER|PC|ALL];

VAL=*value* **[0.00000001÷10,000,0000, default: 0]**

This indicates the expected value of the measurement performed with the COUNTER instrument.

- For the frequency measurements, the parameter unit of measurement is: Hz and the parameter may have values in the 0.01÷10,000,0000 range.
- For the time measurements, the parameter unit of measurement is: sec. and the parameter may have values in the 0.00000001÷10 range.
- For the pulse count measurements the parameter unit of measurement is the number of impulses and the parameter may have values in the 1÷10.000.0000 range. When the instrument is set to operate as a counter and the number of impulses counted is equal to or greater than the value set with the VAL parameter, the "Compare" event is generated.

LEVEL_A=*value* **[-100÷+100V, default: 0V]**

This indicates the trigger level programmed for CHA channel.

LEVEL_B=*value* **[-100÷+100V, default: 0V]**

This indicates the trigger level programmed for CHB channel.

SLOPE_A=*option|value* **[NEG|POS, default:POS]**

This defines the Start Event or first trigger event: i.e. the active edge of the signal on CHA:

NEG | 0 The trigger is activated on the falling edge of the signal on the CHA channel.

POS | 1 The trigger is activated on the rising edge of the signal on the CHA channel.

SLOPE_B=*option|value* **[NEG|POS, default:POS]**

This defines the Start Event or first trigger event: i.e. the active edge of the signal on CHB:

NEG | 0 The trigger is activated on the falling edge of the signal on the CHB channel.

POS | 1 The trigger is activated on the rising edge of the signal on the CHB channel.

DELAY_TRIG=*value* **[0.00000002÷1sec, default: 0sec]**

This defines the delay between the START with the COUNT mode and performing the measurement.

START=*option|value* **[IMMEDIATE|HW1|HW2|SW1|DISABLE|DISARM, default:DISABLE]**

This defines the start method for measuring performed by the instrument. The parameter has six possible values:

IMMEDIATE | 0 This indicates that the measurement will start immediately as soon as the programmed triggers occur.

HW1 | 4 This indicates that measuring will start when the HW1 signal from outside the ACL module (RTCIN1) is activated.

HW2 | 5 This indicates that measuring will start when the HW2 signal from outside the ACL module (RTCIN1) is activated.

SW1 | 6 Indicates that measuring will start when the "Trigger SW1" event that can be generated by the IMM and COUNTER instruments occurs.

DISABLE | 7 This indicates that the COUNTER instrument will be disabled.

DISARM | 8 This is used as "Stop Event" when the counter has been set to operate in the mode defined with the parameter MODE which is the same as COUNT.

GATE=*value* **[0.001÷10sec, default: 0sec]**

This defines the size of the acquisition window i.e. the length of time during which the signal is measured.
The default value 0 has the meaning of AUTO, i.e. the measurement is performed with the value of the GATE parameter calculated according to the value assigned to the VAL parameter.

AVERAGE=*value* **[0÷1,000, default: 1]**
This sets the instrument to effect the number of defined measurements with the AVERAGE parameter and gives the average value of the performed measurements as measurement result. The value 0 indicates that the measurement is performed with the value of the AVERAGE parameter calculated according to the value assigned to the VAL parameter.

MODE=*option*|*value* **[COUNT|COUNT_B|COUNT_GATE|FREQ|TINT_A|TINT_AB|PERIOD , default: COUNT]**
This defines the instrument operating mode, counter, frequency meter, timer and the start and stop modes in the operating mode. The parameter has seven possible values:

COUNT | 0	The instrument is set to operate as a counter. The signal events on CHA are counted The start is specified by the value assigned to the START parameter (IMMEDIATE/HW1/HW2/SW1). To stop counting, a ~SET COUNTER instruction must be executed with the same value assigned to the START parameter as DISARM.
COUNT_B | 1	The instrument is set to operate as a counter. The instrument will count the signal events on CHA for the duration of the signal on CHB.
COUNT_GATE | 2	The instrument is set to operate as a counter. The instrument will count the signal events on CHA for a period of time defined with the GATE parameter.
FREQ | 3	The instrument is set to operate as a frequency meter. The frequency of the signal on the CHA channel will be measured.
TINT_A | 4	The instrument is set to operate as a timer. The time elapsing between the first Start Event and the first Stop Event on channels CHA will be measured.
TINT_AB | 5	The instrument is set to operate as a timer. Operating is the same as that described with the TINT_A parameter value but the Stop Event derived from the signal applied to CHB.
PERIOD | 6	The instrument is set to operate as a timer. The signal period time on the CHA channel will be measured.

HISTERESIS=*option* **[AUTO|10US|300NS|10NS, default: AUTO]**
This defines the period of time after crossing the trigger threshold during which the instrument's ability to signal a new event is disabled.
The parameter has four possible values:

AUTO | 0	The parameter value is automatically set according to the value of the VAL parameter.
10US | 1	The duration of disabling is 10µs.
300NS | 2	The duration of disabling is 300ns.
10NS | 3	The duration of disabling is 10ns.

RANGE_A=*option*|*value* **[10V|100V|10V_50, default: 10V]**
This defines the range of the instrument input signal i.e. a full scale value that contains the instrument programming value. The parameter has three possible values:

10V | 1	This indicates that the signal that will be fed to the CHA channel may be in the ±10V range.
100V | 2	This indicates that the signal that will be fed to the CHA channel may be in the ±100V range.

10V_50 | 3 This indicates that the signal that will be fed to the CHA channel may be in the ±10V range with input impedance of 200KÙ.

INP_A=*option|value* **[NONE|L4|L6, default: NONE]**

This defines the internal line of the ACL module connected to the CHA channel input.

The parameter has seven possible values:

NONE | 0 The CHA channel is not connected to a line.

L4 | 4 The CHA channel is connected to line 4.

L6 | 6 The CHA channel is connected to line 6.

RANGE_B=*option|value* **[10V|100V|10V_50, default: 10V]**

This defines the range of the instrument input signal i.e. a full scale value that contains the instrument programming value. The parameter has three possible values:

10V | 1 This indicates that the signal that will be fed to channel CHB may be in the ±10V range

100V | 2 This indicates that the signal that will be fed to channel CHB may be in the ±100V range

10V_50 | 3 This indicates that the signal that will be fed to channel CHB may be in the ±10V range with input impedance of 50Ω.

The default value for the INP_CHB parameter is NONE.

INP_B=*option|value* **[NONE|L2|L8, default: NONE]**

This defines the internal line of the ACL module connected to the CHB channel input.

The parameter has seven possible values:

NONE | 0 The CHB channel is not connected to a line.

L2 | 2 The CHB channel is connected to line 2.

L8 | 8 The CHB channel is connected to line 8.

TRIG_OUT=*option|value* **[NONE|SW1|SW2, default: NONE]**

This defines the type of trigger signal generated for synchronization with other instruments.

The parameter has three possible values:

NONE | 0 No trigger signal is generated

SW1 | 1 The SW1 software trigger signal is generated, synchronous with the start of the measurement.

SW2 | 2 SW2 indicates the possibility of generating a second SW2 software trigger signal. This function is not yet in use.

DOMAIN=*option|value* **[DRA|PC|ALL, default: COUNTER]**

This parameter synchronizes program execution according to the status of the ACL module, COUNTER instrument or neither of the two.

The parameter may have the following values:

COUNTER | 0 indicates that the ACL module will assume control and relinquish it at the end of COUNTER program execution.

PC | 1 indicates that the Main Computer will remain in control without waiting for the end of program execution of COUNTER or all instruments.

ALL | 2 indicates that the ACL module will assume control and will relinquish it at the end of program execution of all instruments.

3.7.2 ~MEAS COUNTER

The ~MEAS COUNTER instruction is used in functional programs to make the measurements performed with the COUNTER instrument available.

~MEAS COUNTER [INTO=*variable*];

INTO=*variable*	Indicates the variable that the measured value will be inserted in. If no variable is indicated, the measurement results are inserted in the AR variable.

3.7.3 ~CLEAR COUNTER

The ~CLEAR COUNTER instruction is used in functional programs to disable the IMM instrument by disconnecting it from the measure lines.

~CLEAR COUNTER;

The ~CLEAR COUNTER instruction resets the instrument and set its parameters to the default value. Default values are indicated in Appendix A Tab. 4-1.

3.8 Switching/Connecting Instruments

There are instruments on the ACL module that perform switching/connection functions between the instruments in the module, the internal measure lines and the analog lines outside the module.

MONITOR	monitors some ACL module signals
GND	defines the ground used by the instruments on the module.
PULL	defines the pull-up or pull-down resistance values.
LINE	defines control with four or eight internal measure lines and the connection with the system measure line analog bus.
LINE_EXT	defines the connection with an external measure analog bus.
CHANNEL	defines the connection between a channel and the system measure lines.

3.8.1 ~SET MONITOR

The ~SET MONITOR instruction is used in functional programs to make one of twenty-four possible signals on the ACL module available on a coaxial connector. The signal on the MONITOR output can be connected to the MEAS_V meter when the ~SET IMM instruction has been executed and the IPV_POS parameter set to the MONITOR value.

~SET MONITOR [OUT=*option*]

OUT=*option*|*value*	**[IDRA| LPDRA | IDRB | LDRB | IDRC |LDRC | LNDRA | TEMP | REFP | REFN|TH_START|TH_STOP|VOL|VOH|THL|THH|VDRB|VDRC|VDRA|SDRA|SBRB|SDRC|GDRA|GDRB, default:IDRA]** This defines the type of signal that will be made available on the coaxial connector of the ACL module. The OUT parameter may have the following values:

IDRA | 0	Current monitor on DRA output
LPDRA | 1	DRA DAC positive limit
IDRB | 2	Current monitor on DRB output
LDRB | 3	DRB DAC limit
IDRC | 4	Current monitor on DRC output
LDRC | 5	DRC DAC limit

LNDRA | 6	DRA DAC negative limit
TEMP | 7	Dissipator temperature
REFP | 8	Positive reference +5.5V
REFN | 9	Positive reference -5.5V
TH_START | 10	START signal trigger threshold (COUNTER)
TH_STOP | 11	STOP signal trigger threshold (COUNTER)
VOL | 12	VOL digital channels * 0.75
VOH | 13	VOH digital channels * 0.75
THL | 14	Low State Digital CH sensor trigger threshold
THH | 15	High State Digital CH sensor trigger threshold
VDRB | 16	DRB output voltage
VDRC | 17	DRB/10 output voltage
VDRA | 18	DRA output voltage
SDRA | 19	DRA DAC signal
SDRB | 20	DRB DAC signal
SDRC | 21	DRC DAC signal
GDRA | 22	DRA DAC signal gain
GDRB | 23	DRB DAC signal gain

3.8.2 ~SET AGND

The ~SET AGND instruction is used in functional programs to select the ground connection of the ACL module that can be used with the internal measure lines. The ACL module lines can be connected to the physical or virtual ground. The virtual ground is an equipotential point with the physical ground current protected.

~SET AGND [OUT=*option***] [SOURCE=***option***] [TIME_RELE=***option***]**

OUT=*option*|*value* **[OPEN|L1|L2|L3|L4|L5|L6|L7|L8, default: NONE]**

This defines the lines that will be connected to the ground defined with the SOURCE parameter. The parameter may have the following values:

OPEN | 0XFF	The ACL module instrument ground will be disconnected from all the system analogical lines.
L1 | 0XFE	The ACL module instrument ground will be connected to L1.
L2 | 0XFD	The ACL module instrument ground will be connected to L2.
L3 | 0XFB	The ACL module instrument ground will be connected to L3.
L4 | 0XF7	The ACL module instrument ground will be connected to L4.
L5 | 0XEF	The ACL module instrument ground will be connected to L5.
L6 | 0XDF	The ACL module instrument ground will be connected to L6.
L7 | 0XBF	The ACL module instrument ground will be connected to L7.
L8 | 0X7F	The ACL module instrument ground will be connected to L8.

SOURCE=*option*|*value* **[GND|GEN_GND, default: GND]**

This defines the type of ground that will be used by the ACL module instruments. The parameter may have the following values:

GND | 0	The ACL module instrument ground will be connected to the physical ground of the system.
GEN_GND | 1	The ACL module instrument ground will be connected to the ground supplied by the virtual GND generator.

TIME_RELE=*option*|*value* **[ON|OFF, default: ON]**

It defines if the output of the ~SET AGND instruction must wait the switching time of the relays used for instrument programming. It may have these values:

ON | 0	Before quitting the command, the time corresponding to the relay switching time must elapse
OFF | 1	After programming, the switching time before quitting the command does not have to elapse.

The parameter can be useful for sequential programming of different instruments before they are used: all programming before the last can be performed with the value of this parameter set to OFF and only the last programming must be performed with the parameter value set to ON.

All the lines can be grounded although it is important to bear in mind that the physical characteristics of lines L3 and L7 make them the most suitable for grounding. (wider tracks, more extensively spread on surface of printed board, etc.)

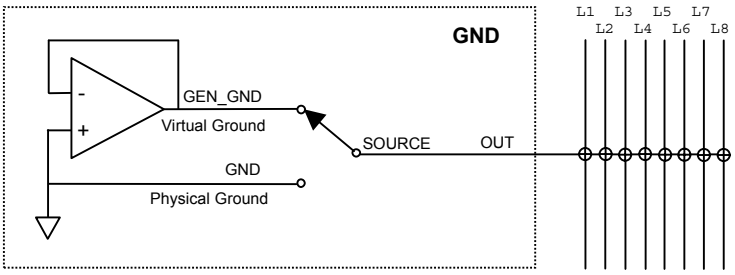

Fig. 3-8 - ACL module: Internal instrument AGND

3.8.3 ~CLEAR AGND

The ~CLEAR AGND instruction is used in functional programs to clear the AGND instrument disconnecting it from the measurement lines.

~CLEAR AGND

The ~CLEAR AGND instruction resets the instrument and set its parameters to the default value. Default values are indicated in Appendix A Tab. 4-1.

3.8.4 ~SET PULL

The ~SET PULL instruction is used in functional programs to select pull up/down/ext resistors on line **L4**. The resistors will be pull-up, pull-down or pull-ext resistances depending on the value of the SOURCE parameter that defines the reference voltage value.

~SET PULL [VAL=*value***] [SOURCE=***option***] [TIME_RELE=***option***]**

VAL=*option*|*value* **[NONE|100|[1000|1K]|[10000|10K]|[100000|100K]|[1000000|1MEG], default: NONE|0]**

This defines the resistive value of the pull-up/down resistor. The parameter may have the following values:

NONE | 0	No pull-up/down resistor will be connected to line L4.
100 | 1	A 100Ω pull-up/down resistor will be connected to line L4.
1K|1000 | 2	A 1KÙ pull-up/down resistor will be connected to line L4.
10K|10000 | 3	A 10KÙ pull-up/down resistor will be connected to line L4.
100K|100000 | 4	A 100KÙ pull-up/down resistor will be connected to line L4.
1MEG|1000000 | 5	A 1MÙ pull-up/down resistor will be connected to line L4.

SOURCE=*option*|*value* **[NONE|L2|GND|VCC, default: NONE]**

This defines the reference point for the resistor defined with the VAL parameter. The parameter may have the following values:

NONE | 0	The resistor defined with the VAL parameter is not connected to a reference point.
L2 | 1	The resistor defined with the VAL parameter is connected to line L2. (PULL-EXT)
GND | 2	The resistance defined with the VAL parameter is connected to the system ground. (PULL-DOWN)

VCC | 3 The resistor defined with the VAL parameter is connected to the VDC voltage. (PULL-UP)

TIME_RELE=*option|value* **[ON|OFF, default: ON]**

It defines if the output of the ~SET PULL instruction must wait the switching time of the relays used for instrument programming.

The parameter may have these values:

ON | 0 Before quitting the command, the time corresponding to the relay switching time must elapse

OFF | 1 After programming, the switching time before quitting the command does not have to elapse.

The parameter can be useful for sequential programming of different instruments before they are used: all programming before the last can be performed with the value of this parameter set to OFF and only the last programming must be performed with the parameter value set to ON.

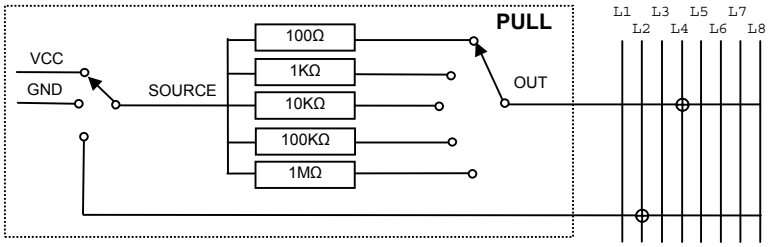

Fig. 3-9 – ACL module:Internal instrument PULL

3.8.5 ~CLEAR PULL

The ~CLEAR PULL instruction is used in functional programs to reset the PULL instrument. The instruction disconnect it from the measurement lines.

~CLEAR PULL;

The ~CLEAR PULL instruction resets the instrument and set its parameters to the default value. Default values are indicated in Appendix A Tab. 4-1.

3.8.6 ~SET LINE

The ~SET LINE instruction is used in functional programs to define control with four or eight internal measure lines and the connection with the system measure line analog bus.

~SET LINE [OUT=*option*] [MODE=*option*] [INT_LINEE=*option*] [TIME_RELE=*option*]

OUT=*option*|*value* **[OPEN|1_4_CLOSE|5_8_CLOSE|CLOSE, default: CLOSE]**
This defines the internal lines of the ACL module that will be connected to the system line analog bus. The parameter may have the following values:

- **OPEN | 0** None of the eight internal measure lines of the ACL module will be connected to the system measure line analog bus.
- **1_4_CLOSE | 1** Lines L1, L2, L3 and L4 are connected to the system measure line analog bus.
- **5_8_CLOSE | 2** Lines L5, L6, L7 and L8 are connected to the system measure line analog bus.
- **CLOSE | 3** All eight internal measure lines of the ACL module are connected to the system measure line analog bus.

MODE=*option*|*value* **[8L|4L, default: 4L]**
This defines the way the internal measure lines in the ACL module are controlled. The parameter may have the following values:

- **8L | 0** The ACL module is programmed to operate with eight measure lines.
- **4L | 1** The ACL module is programmed to operate with four measure lines. Line L1 will be connected to line L5, line L2 will be connected to line L6, line L3 will be connected to line L7 and line L4 will be connected to line L8,

INT_LINEE=*option*|*value* **[MEAS_I|L1-ALL|L5_ALL|ALL, default: ALL]**
This defines the way the measure lines L1 and L5 are controlled internally. The parameter may have the following values:

- **MEAS_I | 0** Only the MEAS_I instrument can be connected to lines L1 and L5 and all the other instruments are disconnected from L1 and L5.
- **L1_ALL | 1** Line L1 is enabled to be connected to all the instruments.
- **L5_ALL | 2** Line L5 is enabled to be connected to all the instruments.
- **ALL | 3** Lines L1 and L5 are enabled to be connected to all the instruments.

TIME_RELE=*option*|*value* **[ON|OFF, default: ON]**
It defines if the output of the ~SET LINE instruction must wait the switching time of the relays used for instrument programming. The parameter may have these values:

- **ON | 0** Before quitting the command, the time corresponding to the relay switching time must elapse
- **OFF | 1** After programming, the switching time before quitting the command does not have to elapse.

The parameter can be useful for sequential programming of different instruments before they are used: all programming before the last can be performed with the value of this parameter set to OFF and only the last programming must be performed with the parameter value set to ON.
The default value for the TIME_RELE parameter is ON.

3.8.7 ~CLEAR LINE

The ~CLEAR LINE instruction is used in functional programs to reset the LINE instrument. The instruction disconnect it from the measurement lines.

~CLEAR LINE;

The ~CLEAR PULL instruction resets the instrument and set its parameters to the default value. Default values are indicated in Appendix A Tab. 4-1.

3.8.8 ~SET LINE_EXT

The ~SET LINE_EXT instruction is used in functional programs to define the connection with an external measure line analog bus.

~SET LINE [OUT=*option*] [TIME_RELE=*option*]

OUT=*option*|*value* [NONE|L1|L2|L3|L4|L5|L6|L7|L8|, default: OPEN]
This defines the internal lines of the ACL module that will be connected to a measure line analog bus outside the system, if present. The parameter may have the following values:

OPEN | 0XFF	All eight lines of the ACL module are disconnected from external bus.
L1 | 0XFE	Line L1 of the ACL module will be connected to external bus.
L2 | 0XFD	Line L2 of the ACL module will be connected to external bus.
L3 | 0XFB	Line L3 of the ACL module will be connected to external bus.
L4 | 0XF7	Line L4 of the ACL module will be connected to external bus.
L5 | 0XEF	Line L5 of the ACL module will be connected to external bus.
L6 | 0XDF	Line L6 of the ACL module will be connected to external bus.
L7 | 0XBF	Line L7 of the ACL module will be connected to external bus.
L8 | 0X7F	Line L8 of the ACL module will be connected to external bus.

The lines from L1 to L8 are associated to the bits, from bit0 to bit7, of the OUT parameter value. A 0 on a bit means that there is a connection between the associated line and the esternal bus. If a numerical value is used for the parameter, it is possible to connect more than one line to the external bus. For example the 0XF8 value defines the connection of the lines L1, L2 and L3 to the external bus.

TIME_RELE=*option*|*value* [ON|OFF, default: ON]
It determines if the output of the ~SET LINE_EXT instruction must wait the switching time of the relays used for instrument programming. The parameter may have these values:

ON	Before quitting the command, the time corresponding to the relay switching time must elapse
OFF	After programming, the switching time before quitting the command does not have to elapse.

The parameter can be useful for sequential programming of different instruments before they are used: all programming before the last can be performed with the value of this parameter set to OFF and only the last programming must be performed with the parameter value set to ON.

3.8.9 ~CLEAR LINE_EXT

The ~CLEAR LINE_EXT instruction is used in functional programs to reset the LINE_EXT instrument. The instruction disconnect it from the measurement lines.

~CLEAR LINE_EXT;

The ~CLEAR LINE_EXT instruction resets the instrument and set its parameters to the default value. Default values are indicated in Appendix A Tab. 4-1.

3.9 Resources of common use present on the ACL DSP MODULE

On the ACL module (ACL DSP module) there are some hardware resources of common use which are present on the two connectors "USER" (JP6) and "FIXTURE" (JP5) as shown in Fig. 3-10. From: Fig. 3-11 to: Fig. 3-16 are reported patterns of electrical signal on the two "USER" (JP6) and "FIXTURE" connectors
The available resources are:

OC0÷OC7	group of eight "OPEN COLLECTOR" outputs	(3 mA, 10 KHz Max).
RTOIS0÷ RTOIS3	group of four opto-coupled outputs	(10 mA, 2 MHz Max).
JTOIS0÷ JTOIS1	group of two opto-coupled outputs	(5 mA, 2 MHz Max).
FXO0÷ FXO3	group of four opto-coupled outputs	(3 mA, 10 KHz Max).
RTI0÷ RTI3	group of four opto-coupled outputs	(5 mA, 2 MHz Max).
JTI0÷ JTI3	group of four opto-coupled outputs	(5 mA, 2 MHz Max).
FXI0÷ FXI3	group of four opto-coupled outputs	(5 mA, 10 KHz Max).

~SET WR_HW for writing operations on the hardware output resources.
~MEAS RD_HW for reading operations on the hardware input resources.

3.9.1 ~SET WR_HW

The ~SET WR-HW instruction is used inside functional programs to write or configure the hardware output resources.

~SET WR_HD **[TYPE=OC|RT|JT|FX| [DATA=*value*]**

TYPE = *option|value* **[OC|RT|JT|FX , default: OC]**
This defines the kind of hardware output resources which will be set

OC | 0	It identifies the eight "open collector" outputs, (OC0÷OC7).
RT | 1	It identifies the four "opto-coupled" outputs, (RTOIS0÷ RTOIS3).
JT | 2	It identifies the two "opto-coupled" outputs, (JTOIS0÷ JTOIS1).
FX | 3	It identifies the four "opto-coupled" outputs, (FXO0÷ FXO3).

DATA= *value* **[0÷255, default: 0]**
It expresses the configuration of the group selected with the "TYPE" parameter. In particular:

If TYPE=OC bit0÷bit7, of DATA parameter, correspond to the "OC0÷OC7" signals. A 1 on the bit defines the corresponding "open collector" open circuit, a 0 on the bit defines the corresponding "open collector" closed circuit.

If TYPE=RT bit0÷bit3, of DATA parameter, define the configuration assumed by the four output signals: RTOIS0÷ RTOIS3.

If TYPE=JT bit0÷bit3, of DATA parameter, define the configuration assumed by the two output signals: JTOIS0 and JTOIS1.
bit0÷bit1 define the value which will be assumed by the JTOIS0 signal, whit the following meaning:
00: the JTOIS0 signal will be kept at a logical level "0"
00: the JTOIS0 signal will be kept at a logical level "1"
10: the JTOIS0 signal will be connected to the sensor of the digital channel 0.
11: the JTOIS0 signal will be connected to the sensor of the digital channel 1.
bit2÷bit3 defines the value which will be assumed by the JTOIS1 signal, with the following meaning:
00: the JTOIS1 signal will be kept a a logical level "0"
00: the JTOIS1 signal will be kept at a logical level "1"
10: the JTOIS0 signal will be connected to the sensor of the digital channel 2.
11: the JTOIS0 signal will be connected to the sensor of the digital channel 3.

If TYPE=FX bit0÷bit3, of the byte which contains the value assumed by the DATA parameter, define the configuration assumed by the four output signals: FXO0÷ FXO3.

3.9.2 ~MEAS RD_HW

The ~MEAS RD_HW instruction is used inside functional programs to read the hardware input resources.

~MEAS RD_HD [INTO=*variable*] [TYPE=RT|JT|FX|]

INTO= *variable* It indicates the variable that will be used to store the data read by the input instruments, commonly used and situated on the ACL DSP MODULE. According to the value assumed by the "TYPE" parameter, the read value will have the following meaning:

If TYPE=RT bit0÷bit3 of the read value represent the configuration assumed by the four input signals: RTI0÷ RTI3.

If TYPE=JT bit0÷bit3 of the read value represent the configuration assumed by the four input signals: JTI0÷ JTI3.

If TYPE=FX bit0÷bit3 of the read value represent the configuration assumed by the four input signals: FXI0÷ FXI3.

TYPE = *option|value* **[RT|JT|FX , default: RT]**

It defines the source of the read data:

RT | 1 RTI0÷ RTI3 signals are read.

JT | 2 JTI0÷ JTI3 signals are read.

FX | 3 FXI0÷ FXI3 signals are read.

Pinout connector “USER”			
Pin	Segnale	Pin	Segnale
1	OC3	26	OC1
2	OC2	27	OC0
3	OC6	28	OC4
4	OC5	29	OCC1
5	RTOIS1	30	OCC2
6	RTOIS0	31	OC7
7	EXTVCC	32	RTOIS3
8	EXTGND	33	RTOIS2
9	NRTI1	34	JTOIS1
10	PRTI1	35	JTOIS0
11	NRTI3	36	NRTI0
12	PRTI3	37	PRTI0
13	NJTI1	38	NRTI2
14	PJTI1	39	PRTI2
15	NJTI3	40	NJTI0
16	PJTI3	41	PJTI0
17	FXO3	42	NJTI2
18	FXO2	43	PJTI2
19	NFXI0	44	FXO1
20	PFXI0	45	FXO0
21	NFXI2	46	GND
22	PFXI2	47	FXCOM
23	NFXI3	48	NFXI1
24	PFXI3	49	PFXI1
25	VCC_FUSE_R	50	GND

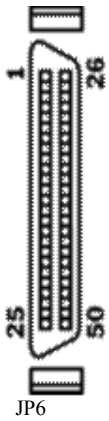

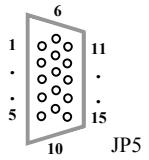

Pinout connector “FIXTURE”			
Pin	Segnale	Pin	Segnale
1	FXO0	9	NFXI0
2	FXO1	10	PFXI1
3	FXO2	11	NFXI1
4	FXO3	12	PFXI2
5	FXCOM	13	NFXI2
6	GND	14	PFXI3
7	VCC	15	NFXI3
8	PFXI0		

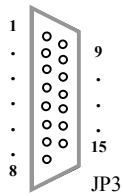

Pinout connector “OPEN FIX”			
Pin	Segnale	Pin	Segnale
1	SC_P1	9	GND
2	SC_P2	10	PVAL
3	SC_P3	11	GND
4	SC_P4	12	VCC
5	SC_P5	13	GND
6	SC_P6	14	+15V
7	SC_P7	15	-15V
8	SC_P8		

Pinout connector “HW PROG(RJ45)”			
Pin	Segnale	Pin	Segnale
1	-INPOD	5	POD05A
2	+INPOD	6	POD5A
3	PODDIR	7	POD20A
4	PODAMP	8	5REL

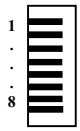

opz. FCMES

Pinout connector “FLOAT METER”			
Pin	Segnale	Pin	Segnale
A1	+INCON	3	-60mV
1		4	
2		5	+60mV
A2	-CON5A		

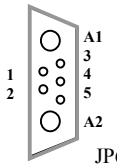

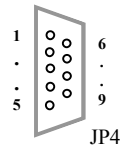

Pinout connector “ANALOG BUS”			
Pin	Segnale	Pin	Segnale
1	EL1	6	EL6
2	EL2	7	EL7
3	EL3	8	EL8
4	EL4	9	GND
5	EL5		

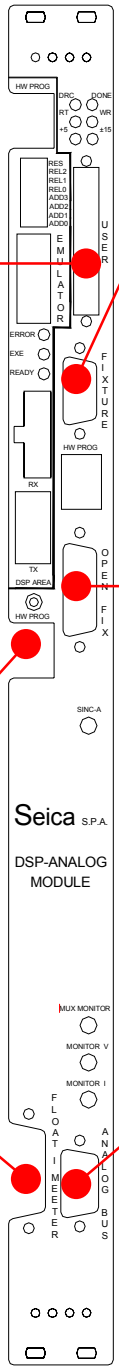

Fig. 3-10 - ACL module: Connectors and signals

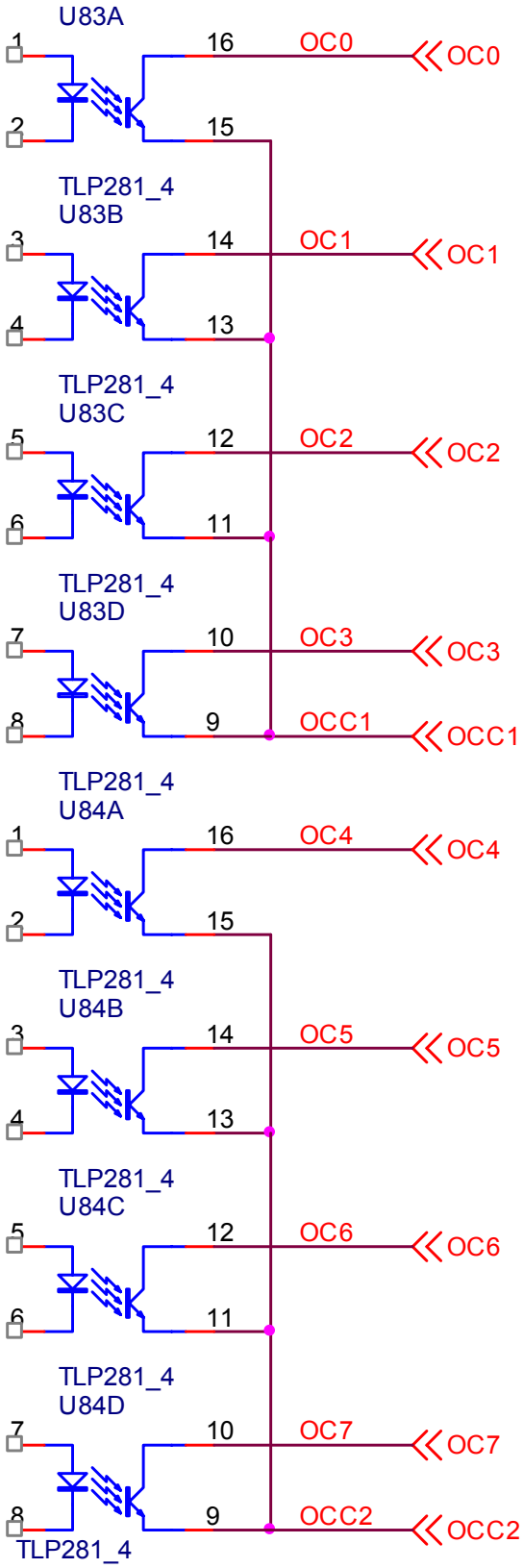

Fig. 3-11 - ACL module: Diagram of electrical output signals OC0 ÷ OC7

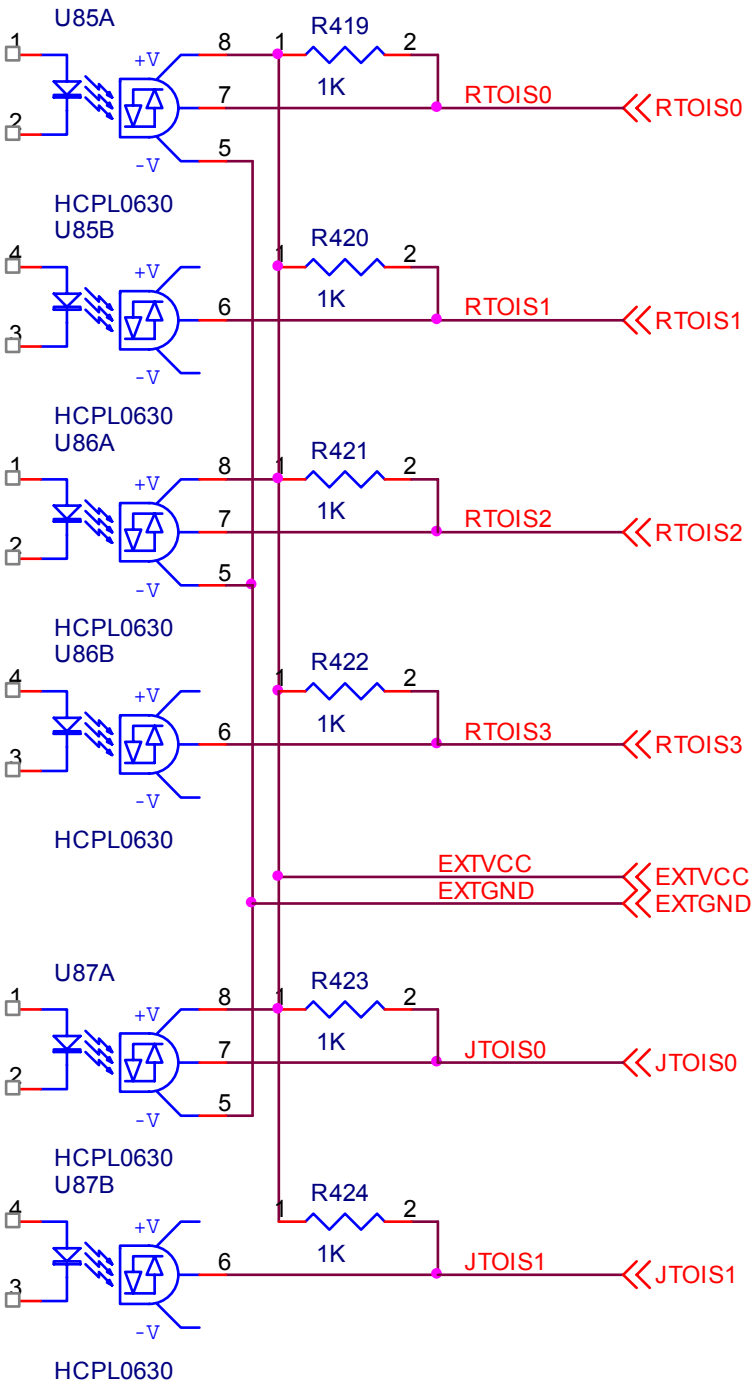

Fig. 3-12 - ACL module: Diagram of electrical output signals RTOIS0 ÷ RTOIS3 and JTOIS0 ÷ JTOIS1

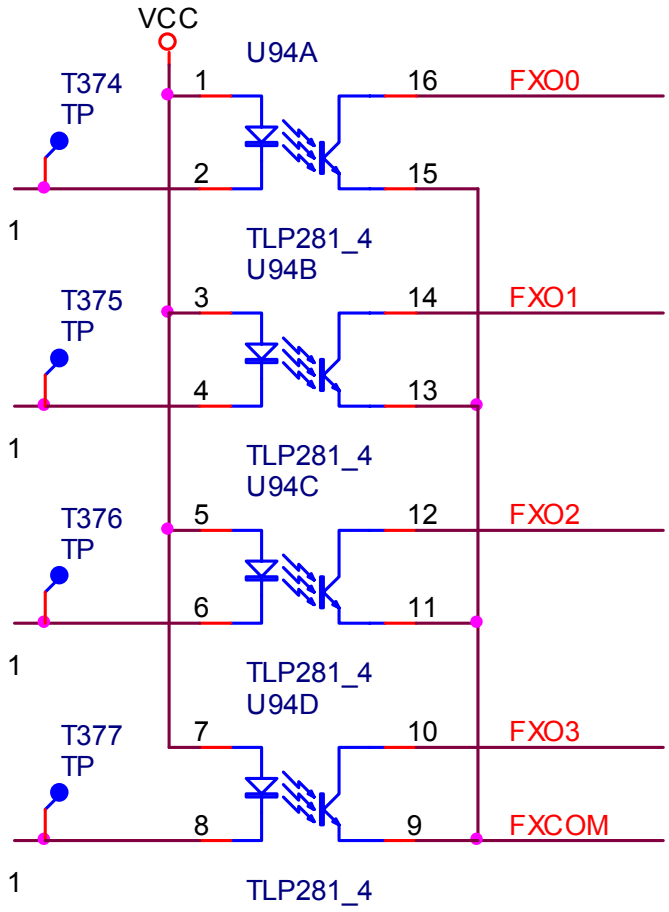

Fig. 3-13 - ACL module: Diagram of electrical output signals FXO0 ÷ FXO3

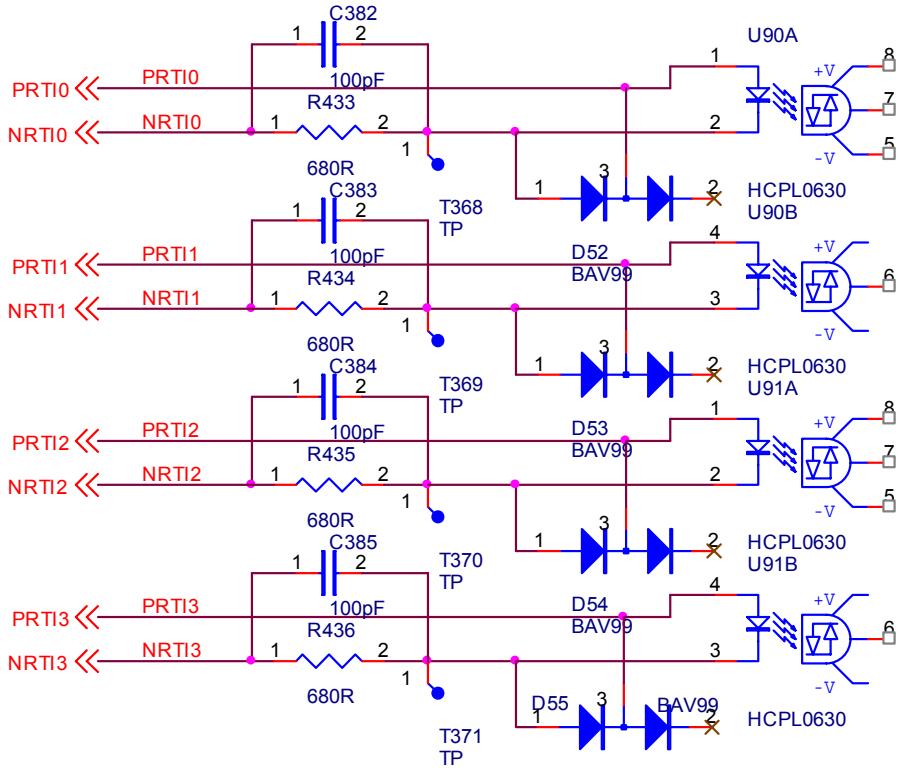

Fig. 3-14 - ACL module: Diagram of electrical input signals RTI0÷ RTI3

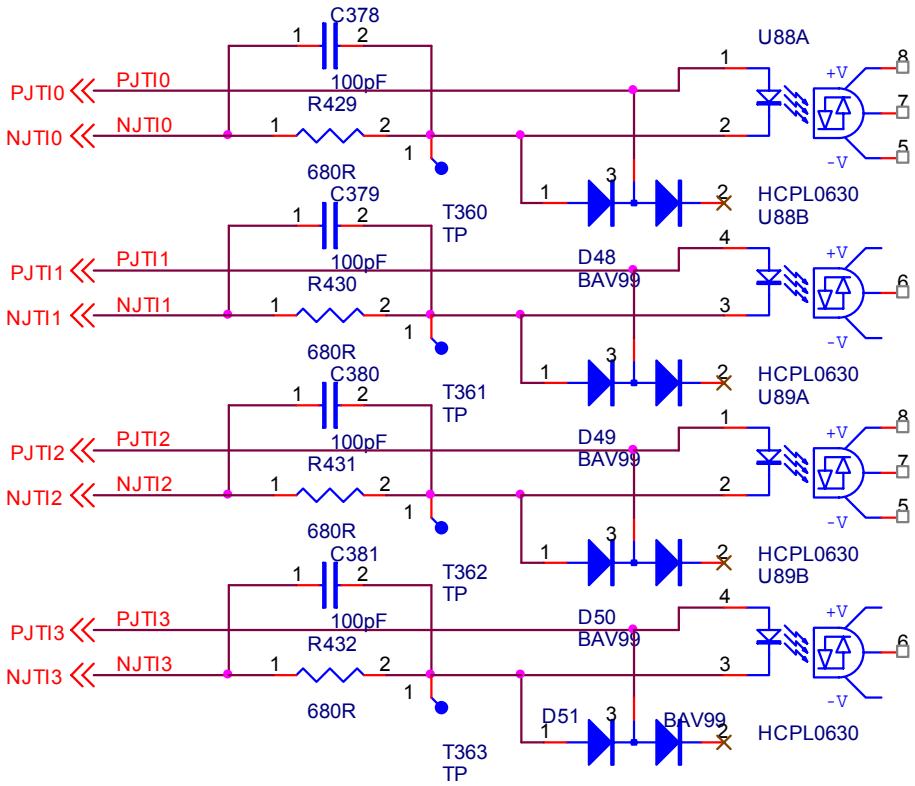

Fig. 3-15 - ACL module: Diagram of electrical input signals JTI0÷ JTI3

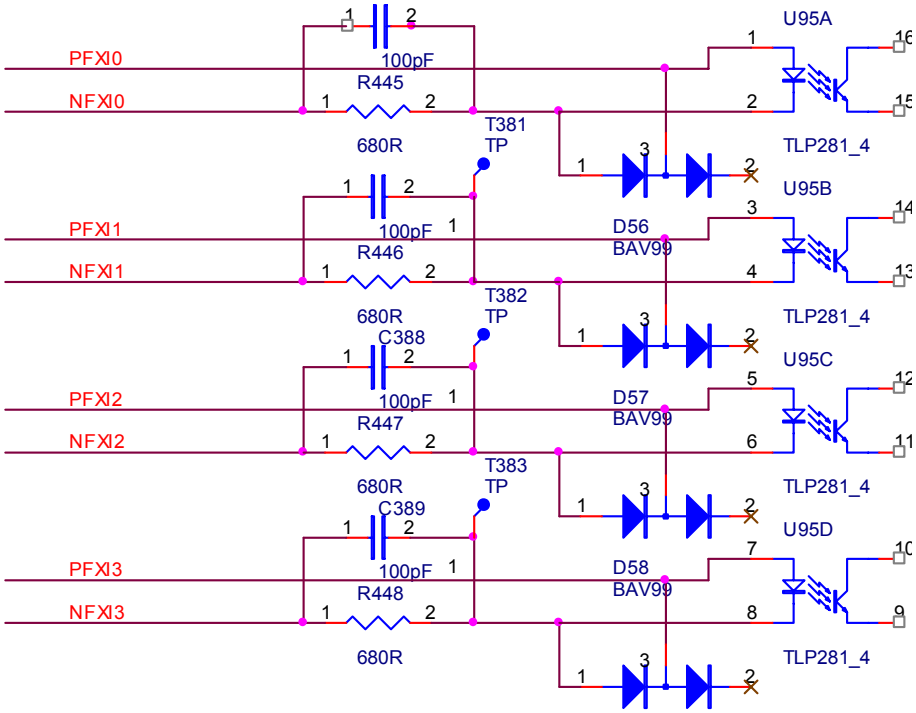

Fig. 3-16 - ACL module: Diagram of electrical input signals FXI0÷ FXI3

3.10 Resources of common use managed by ACL DSP module

Some system resources, even if they aren't present on the ACL module, are managed by the code executed by the processor situated on the ACL DSP MODULE. The external resources managed by the module ACL processor are the following:

- Channel boards which enables the connection between the measure lines and the nodes of the modules under test.
- Boards containing predefined and configurable resources for the test programs execution.

At the moment the instruction for this kind of resources are the following:

~SET CHANNEL	To connect the measurement lines of the channel to the nodes of the module under test.
~CLEAR CHANNEL	To set the system channels to the default values.
~SET POWERSCAN	Definition of the operation mode of the HRELE channel board.
~CLEAR POWERSCAN	To set the HRELE channel board to the default values.
~SET IOV5LOAD	Definition of the IOV5LOAD board operation mode.
~CLEAR IOV5LOAD	To set the IOV5LOAD boards to the default value.
~SET IOV5LOAD_OUT_A	Definition of the operation mode of the A outputs of IOV5LOAD board.
~SET IOV5LOAD_OUT_B	Definition of the operation mode of the B outputs of IOV5LOAD board.
~SET IOV5LOAD_OUT_LOAD	Definition of the operation mode of the LOAD outputs of IOV5LOAD board.
~GET IOV5LOAD_OUT_LOAD	Reading of the operation mode of the LOAD outputs of IOV5LOAD board.
~SET IOV5LOAD_OUT_ANA	Definition of the operation mode of the ANA outputs of IOV5LOAD board.
~SET IOV5LOAD_OUT_OPTO	Definition of the operation mode of the OPTO outputs of IOV5LOAD board.

3.10.1 ~SET CHANNEL

The ~SET CHANNEL instruction is used to connect the eight analog measure lines to a channel. The Channel has a single PC (terminal) on one side, connected to a specific point, or node of the testing board. On the opposite side it has as many PC (terminal) as the number of the system analogical measurement lines.

~SET CHANNEL [**CHN=***value*], | [**LINEE=***value*], | [**MODE=4L_INC|4L-IMM|8L_INC|8L-IMM**], [**BLINEE=CLOSE|OPEN**], [**ALL=ON|OFF**], **[TIME_RELE=ON|OFF]**

CHN=*value* **[0÷8,192, default: 0]**
The parameter indicates the channel that is to be connected to the eight analog measure lines. The parameter is expressed as a whole number and may have values in the 0÷8,192 range. The default value for the CHN parameter is 0 and means no channel is used.

LINEE=*value* **[0÷255|0X00÷0XFF, default: 0]**
The parameter indicates the analog measure lines to be connected/disconnect to the channel identified by the CHN parameter. The parameter is expressed as a whole number and may have values in the 0÷255 range. The default value for the LINEE parameter is 0 and means no line is used (all lines disconnected). The eight measure lines are identified by the eight bits in byte that are used to configure values in the 0÷255 or 0X00÷OXFF range. The less significant bit (LSB) corresponds to line 1 (LI1) whereas the most significant bit (MSB) corresponds to line 8 (LI8). 1 on the bit means that the line is in use, whereas 0 means line not used. The use mode is defined with the "MODE" parameter. Fig. 3-17 - ACL module: Analog System Bus Lines, Board Lines and Channel Boards
shows the system analog line bus, the board lines of the ACLAM module, the board lines of the channel boards and the channel boards with four and eight lines. In Fig. 3-17 - ACL module: Analog System Bus Lines, Board Lines and Channel Boards
you can see that when the channel boards are configured for channels with eight lines, only half of the channels available when the channel boards are configured for channels with four lines are available.

MODE=*option|value* **[4L_INC|4L_IMM|8L_INC|8L_IMM, default: 4L_IMM]**
The parameter indicates the line channel connection mode. The parameter may have the following values:

4L_INC_O | 0 This indicates the incremental mode of disconnecting the channel to the line. Therefore, the previous connection situation is maintained and the operations defined with the LINEE parameter are effected on it. This option is used with channels with four lines.

4L_INC_C | 1 This indicates the incremental mode of connecting the channel to the line. Therefore, the previous connection situation is maintained and the operations defined with the LINEE parameter are effected on it. This option is used with channels with four lines.

4L_IMM | 2 This indicates the normal mode of connecting/disconnecting the channel to the line. Therefore, the specified channel is connected to the linees defined with the LINEE parameter. The other lines are disconnected. This option is used with channels with four lines.

8L_INC_O | 3 This indicates the incremental mode of disconnecting the channel to the line. Therefore, the previous connection situation is maintained and the operations defined with the LINEE parameter are effected on it. This option is used with channels with eight lines.

8L_INC_C | 4 This indicates the incremental mode of connecting the channel to the line. Therefore, the previous connection situation is maintained and the operations defined with the LINEE parameter are effected on it. This option is used with channels with eight lines.

8L_IMM | 5 This indicates the normal mode of connecting/disconnecting the channel to the line. Therefore, the specified channel is connected to the linees defined with the LINEE parameter. The other lines are disconnected. This option is used with channels with eight lines.

2L_INC_O | 6 This indicates the incremental mode of disconnecting the channel to the line. Therefore, the previous connection situation is maintained and the operations defined with the LINEE parameter are effected on it. This option is used with channels with two lines (HRELE module).

2L_INC_C | 7 This indicates the incremental mode of connecting the channel to the line. Therefore, the previous connection situation is maintained and the operations defined with the LINEE parameter are effected on it. This option is used with channels with two lines (HRELE module).

2L_IMM | 8 This indicates the normal mode of connecting/disconnecting the channel to the line. Therefore, the specified channel is connected to the linees defined with the LINEE parameter. The other lines are disconnected. This option is used with channels with two lines (HRELE module).

BLINEE=*option|value* **[CLOSE|OPEN|, default: CLOSE]**

This parameter indicates if the relay on the Board Line of the channel board containing the channel identified with the CHN parameter must be open or closed:

CLOSE | 0 The relay that connects the Board Line of the channel board containing the channel identified with the CHN parameter is opened by connecting the Board Line of the channel board to the system analog bus line.

OPEN | 1 The relay that connects the Board Line of the channel board containing the channel identified with the CHN parameter is not closed and the Board Line of the channel board is not connected to the system analog bus line. This option for the BLINEE parameter allows you to use the channel board to connect channels to each other without being connected to the system analog bus lines.

The default value for the BLINEE parameter is CLOSE.

ALL=*option|value* **[ON|OFF|, default: OFF]**

This parameter indicates that all the channels must be connected/disconnected to/from the lines simultaneously. The connection/disconnection state is indicated by the LINEE parameter.

ON | 0 All the channels are connected/disconnected to/from the lines simultaneously. In this case, the CHN parameter is not influent because the channel connection/disconnection is executed on ALL channels of the system.

OFF | 1 The channel are NOT connected/disconnected to/from the lines simultaneously. Only the channel indicated by the CHN parameter will be connected/disconnected to/from the lines. The lines are the ones indicated by the LINEE parameter.

TIME_RELE =*option*|*value***[ON|OFF|, default: ON]**

It defines if the ~SET CHANNEL instruction output must wait the switching time of the relays used for the instrument programming. The parameter may have these values:

ON | 0 Before quitting the command, the time corresponding to the relay switching time must elapse

OFF | 1 After programming, the switching time before quitting the command does not have to elapse.

The parameter can be useful for sequential programming of different instruments before they are used: all programming before the last can be performed with the value of this parameter set to OFF and only the last programming must be performed with the parameter value set to ON.

The default value for the TIME_RELE parameter is ON.

3.10.2 ~CLEAR CHANNEL

The ~CLEAR CHANNEL instruction is used in functional programs to reset the CHANNEL instrument. The instruction disconnect it from the measurement lines.

~CLEAR CHANNEL;

The ~CLEAR CHANNEL instruction resets the instrument and set its parameters to the default value. Default values are indicated in Appendix A Tab. 4-1.

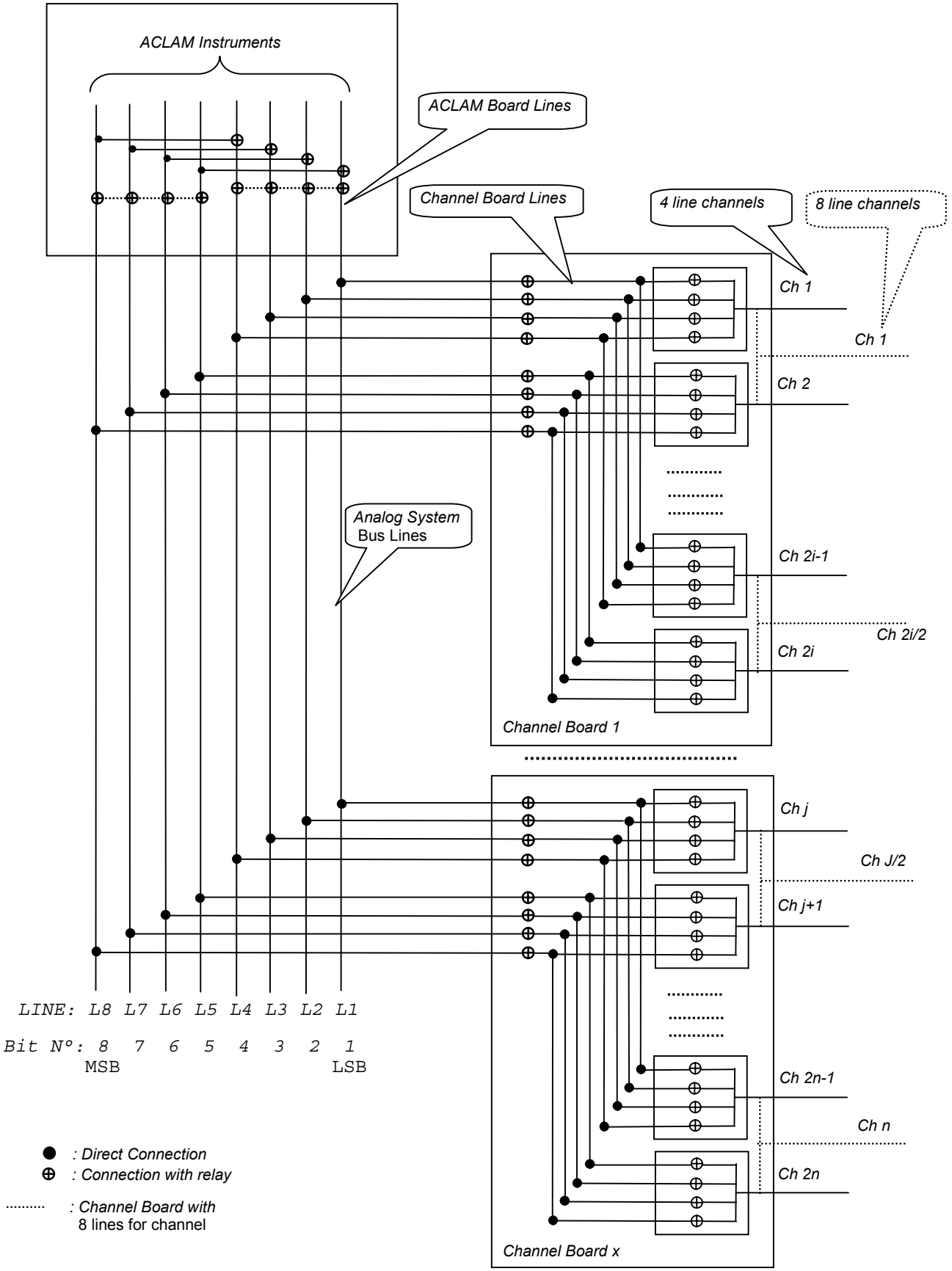

Fig. 3-17 - ACL module: Analog System Bus Lines, Board Lines and Channel Boards

3.10.3 ~SET POWERSCAN

The ~SET POWERSCAN instruction is used to define the operation mode of the HRELE, channel boards.
The HRELE board is a channel board containing 32 double-line channels; it connects the lines to the nodes of the UUT. The lines are present on two different busses of the test system: System Signal BUS and System Power BUS. As shown in Fig. 3-18, the HRELE board can be configured in different ways. With pairs of channels it is possible to obtain a channel board with 16 channels with 4 lines and by double grouping these pairs it is possible to obtain a channel board with 8 channels with 8 lines.
The lines connection from the system bus to the channels is executed with the ~SET CHANNEL instruction.

~SET POWERSCAN [**BOARD=***value*], [**MODE=***value*] [**SIGNAL=***value*] [**S20BDLINE=***value*] [**PWRBDLINE=***value*] [**CROSSLINE=***value*] [**MERGEPWRS20LINE=***value*] [**OEB=***option*]

BOARD=*value* **[0÷127, default: 0]**
It identifies the HRELE board to program.

MODE=*value* **[0÷7|, default: 0]**
This defines the operation mode of the HRELE board.
0 The HRELE board will automatically and simultaneously close the eight S20BLINE relays when the ~SET CHANNEL instruction is executed, for the relative channel.
1 Only the relays defined with the parameter "S20BDLINE" will be closed when the ~SET CHANNEL instruction is executed, for the relative channel.
2÷7 This function is not yet in use.

SIGNAL= *value* **[array of 64 internal elements with values 0÷1, default: all the array elements at 0]**
This defines the buffer of 64 elements which represents the 64 "Signal" lines situated on the HRELE boards. (ARRAY(0)= Signal 1, ARRAY(1)=Signal 2….. ARRAY(63)=Signal 64).
Each array element can assume the values 0 or 1, with the following meaning:
0 The execution of the ~SET CHANNEL instruction for the relative channel, will close the corresponding Power relay only, while the corresponding Signal relay will not be closed.
1 The execution of the ~SET CHANNEL instruction for the relatice channel will close both relays Power and Signal.

S20BDLINE= *value* **[array of 8 internal elements with values 0÷1, default: all the array elements at 0]**
This defines the buffers of 8 elements which represents the eight "S20BDLINE" relays situated on the HRELE boards. (ARRAY(0)=S20BDLINE1, …... ARRAY(7)=S20BDLINE8). The "S20BDLINE" relays enable the connection of the eight internal signal lines of the HRELE with the eight lines of the analogical bus: "System Signal BUS". The parameter is significant when the "MODE" parameter is set to value 1.
Each array element can assume the value 0 or 1, with the following meaning:
0 The execution of the ~SET CHANNEL instruction, for the relative channel, **will not close** the corresponding "S20BDLINE" relay.
1 The execution of the ~SET CHANNEL instruction, for the relative channel, **will close** the corresponding "S20BDLINE" relay.
It is important to keep in mind that the connection of a analogical bus line to a channel of the HRELE board is subordinated to the closing of at least one relay of the group "S20BLINE" and to the closing of the relay of the corresponding Signal channel.

PWRBDLINE= *value* **[array of 8 internal elements with values 0÷1, default: all the array elements at 1]**
This defines the buffers of 8 elements which represents the eight "PWRBDLINE" relays situated on the HRELE boards. (ARRAY(0)=PWRBDLINE1, …... ARRAY(7)= PWRBDLINE8). The "PWRBDLINE" relays enable the connection of the eight internal power lines of the HRELE board with the eight lines of the power analogical bus of the system: "System Power BUS".
Each array element can assume the value 0 or 1, with the following meaning:

0 The execution of the ~SET CHANNEL instruction, for the relative channel, **will close** the corresponding "PWRBDLINE" relay.

1 The execution of the ~SET CHANNEL instruction, for the relative channel **will not close** the corresponding "PWRBDLINE" relay.

It is important to keep in mind that the connection of a analogical bus line to a channel of the HRELE board is subordinated to the closing of at least one relay of the group "PWRBLINE" and to the closing of the relay of the corresponding Signal channel.

CROSSLINE= *value* **[array of 8 internal elements with values 0÷1, default: all the array elements at 1]**

This defines the buffers of 8 elements which represents the eight "CROSSLINE" relays situated on the HRELE boards. (ARRAY(0)=CROSSLNE1, ….. ARRAY(7)=CROSSLINE8). The "CROSSLINE" relays enable the connection between the internal lines of the HRELE board. The connections can occur only between the internal lines of each internal bus: "Signal Board Lines BLn" and "Power Board Lines PLn", as shown in Fig. 3-18. The connections occur simultaneously on the two internal busses of the board: each "CROSSLINE" relay acts simultaneously on four contacts: two power ones associated to the "PLn" lines and two signal ones associated to the "BLn" lines.

Each array element can assume the value 0 or 1, with the following meaning:

0 the corresponding relay **will execute** the connection defined for that relay on the board identified with the value of the BOARD parameter.

1 the corresponding relay **will not execute** the connection defined for that relay on the board identified with the value of the board BOARD parameter.

Hereunder you can find the the connection defined for each "CROSSLINE" relay:

CROSSLINE1 the relay defines the connection between BL1 and BL3, PL1 and PL3.
CROSSLINE2 the relay defines the connection between BL1and BL5, PL1 and PL5.
CROSSLINE3 the relay defines the connection between BL1 and BL7, PL1 and PL7.
CROSSLINE4 the relay defines the connection between BL2 and BL4, PL2 and PL4.
CROSSLINE5 the relay defines the connection between BL2 and BL6, PL2 and PL6.
CROSSLINE6 the relay defines the connection between BL2 and BL8, PL2 and PL8.
CROSSLINE7 the relay defines the connection between BL3 and BL7, PL3 and PL7.
CROSSLINE8 the relay defines the connection between BL4 and BL8, PL4 and PL8.

MERGEPWRS20LINE= *value*

[array of 8 internal elements with values 0÷1, default: all the array elements at 0]

This defines the buffers of 8 elements which represents the eight "MERGEPWRS20LINE" relays situated on the HRELE board. (ARRAY(0)= MERGEPWRS20LINE1, ….. ARRAY(7)= MERGEPWRS20LINE8). The "MERGEPWRS20LINE" relays enable the connection between the system signal bus and the "System Power BUS".

Each array element can assume the value 0 or 1, with the following meaning:

0 the corresponding relay **will not execute** the connection defined for that relay on the board identified with the value of the board BOARD parameter.

1 the corresponding relay **will execute** the connection defined for that relay on the board identified with the value of the BOARD parameter.

Hereunder you can find the the connection defined for each "MERGEPWRS20LINE" relay :

MERGEPWRS20LINE1 the relay defines the connection between the internal Signal line "BL1" and the external line 1 of the power analogical bus of the system: "System Power BUS".

MERGEPWRS20LINE2 the relay defines the connection between the internal Signal line "BL2" and the external line 2 of the power analogical bus of the system: "System Power BUS".

MERGEPWRS20LINE3 the relay defines the connection between the internal Signal line "BL3" and the external line 3 of the power analogical bus of the system: "System Power BUS".

MERGEPWRS20LINE4 the relay defines the connection between the internal Signal line "BL4" and the external line 4 of the power analogical bus of the system: "System Power BUS".

MERGEPWRS20LINE5 the relay defines the connection between the internal Signal line "BL5" and the external line 5 of the power analogical bus of the system: "System Power BUS".

MERGEPWRS20LINE6 the relay defines the connection between the internal Signal line "BL6" and the external line 6 of the power analogical bus of the system: "System Power BUS".

MERGEPWRS20LINE7 the relay defines the connection between the internal Signal line "BL7" and the external line 7 of the power analogical bus of the system: "System Power BUS"..

MERGEPWRS20LINE8 the relay defines the connection between the internal Signal line "BL8" and the external line 8 of the power analogical bus of the system: "System Power BUS".

It is important to keep in mind the difference of power between the analogical lines and the power analogical lines when you define and use the connection between the two kind of lines.

HRELE: 32 two lines channels
Power Max Current: 20A @ 28V
Signal Max Current: 3A @ 28V

OEB= *option* **[ON|OFF, default:ON]**

The parameter defines if the relay closure defined with the other parameters of this function have to be executed. The parameter can assume the value ON and OFF, with the following meaning:

ON the relays will close, as defined with the **SIGNAL, S20BDLINE, PWRBDLINE CROSSLINE, MERGEPWRS20LINE** parameters.

OFF the relays will not close, as defined with the **SIGNAL, S20BDLINE, PWRBDLINE CROSSLINE, MERGEPWRS20LINE** parameters.

3.10.4 ~CLEAR POWERSCAN

The ~CLEAR POWERSCAN instruction is used inside functional programs to erase the settings executed on a defined HRELE board.

~CLEAR POWERSCN [**BOARD=***value*]**;**

BOARD=*value* **[0÷127, default: 0]**

This identifies the HRELE board on which the settings defined with the current ~CLEAR POWERSCAN will be executed.

The ~CLEAR POWERSCAN instruction sends a reset control to the board. The reset sets the board parameters to the default value. Shown in Tab. 4-1, of appendix A.

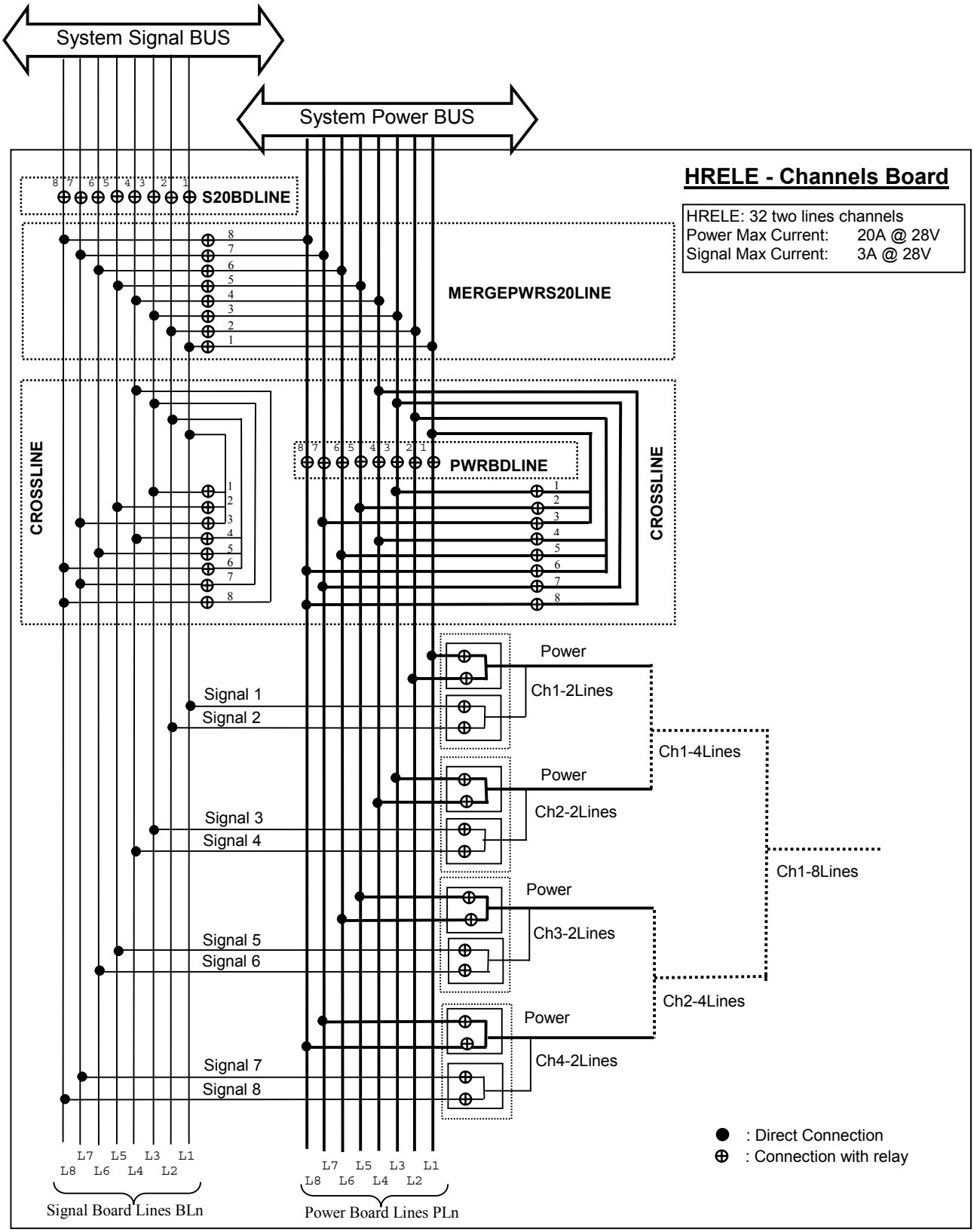

Fig. 3-18 - ACL module: HRELE channels board and the first four 2 lines-channels

3.10.5 ~SET IOV5LOAD

The ~SET IOV5LOAD instruction is used to define the operation mode of IOV5LOAD board. The IOV5LOAD board contains five resource groups which can be used for the test program execution. Each IOV5LOAD board contains the following resources:

OUT_A	**18**	Resources which enable a connection to Vbat , or to GND, or to GND through a resistive load, or to a SPARE point. See Fig. 3-19
OUT_B	**5**	Resources which enable a connection to Vbat, or to GND, or to Vbat or GND through a resistive load. See Fig. 3-19
OUT_LOAD	**5**	Resources which enable the connection to a resistive load variable from 0 to 1KΩ, and which can be programmed with a step of 1Ω. See Fig. 3-20
OUT_ANA	**4**	Resources which enable the connection to a tension generator variable from 0 to 10V, and which can be programmed with a step of 1,22 mV. See Fig. 3-20
OUT_OPTO	**8**	Resources which enable the connection to opto-coupled outputs. See Fig. 3-20

The drawing of Fig. 3-19 and Fig. 3-20 show the description of the five kinds of resources available with the IOV5LOAD board.

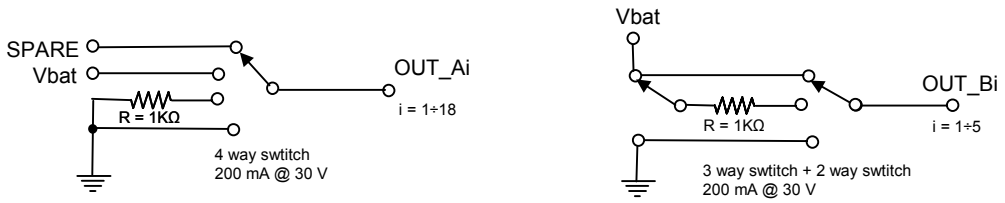

Fig. 3-19 - ACL module: IOV5LOAD OUT_A and OUT_B

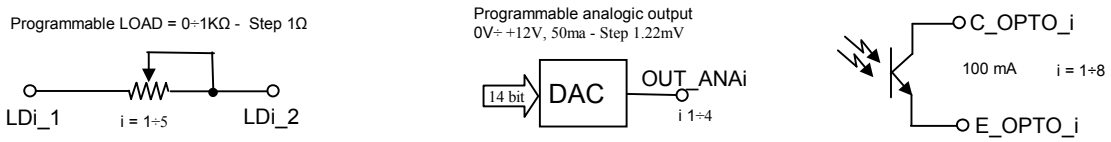

Fig. 3-20 - ACL module: IOV5LOAD: OUT_LOAD, OUT_ANA and OUT_OPTO

NOTE: On the test system you can insert several IOV5LOAD boards (MAX 16).

~SET IOV5LOAD [BOARD=value], [OEB=option]

BOARD=*value* **[0÷16, default: 0]**
It identifies the IOV5LOAD board on which the settings defined with the current ~SET IOV5LOAD instruction will be executed.

OEB= *option* **[ON|OFF, default:ON]**
The parameter defines the state of the OEB (Open Enable Board) signal for the board identified with the BOARD parameter value. The OEB signal is the signal which enables the availability of the resources present on a board. It enables the closure of the relays which connect the board resources to the bus of the measurement system. The parameter can assume the values ON and OFF, with the following meaning:

ON | 0 The relays, which enable the resources of the board will be closed. The resources are available.

OFF | 1 The relays which enable the resources of the board will be open and the resources are not available.

3.10.6 ~CLEAR IOV5LOAD

The ~CLEAR IOV5LOAD instruction is used inside functional programs to erase the settings executed on a defined IOV5LOAD board.

~CLEAR IOV5LOAD [**BOARD=***value*]**;**

BOARD=*value* **[0÷16, default: 0]**
Identifies the IOV5LOAD on which the ~CLEAR IOV5LOAD settings will be executed.

The ~CLEAR IOV5LOAD instruction send a reset control to the board. The reset sets the board parameter to the default value. Shown in Tab. 4-1, of appendix A.

3.10.7 ~SET IOV5LOAD_OUT_A

the ~SET IOV5LOAD_OUT_A instruction is used inside functional programs to set the operation modes of the OUT_A resources.

~SET IOV5LOAD_OUT_A [**OUT=***value*], [**STATUS=***option*]

OUT=*value* **[0÷288, default: 0]**
It identifies the OUT_A resources, available with the IOV5LOAD boards, which will be programmed with the mode defined with the "STATUS" parameter of this function.

STATUS= *option* **[SPARE|GND|PULLDOWN|VBAT, default:SPARE]**
The parameter defines the operation mode of the "OUT_A" resource:

SPARE|1 the resource identified with the value assumed by the "OUT" parameter will be connected to the circuit "SPARE" point.

GND|2 the resource identified with the value assumed by the "OUT" parameter will be directly connected to the system physical ground.

PULLDOWN|4 the resource identified with the value assumed by the "OUT" parameter will be connected to the system physical ground through a pull-down resistance of 1KΩ.

VBAT|10 the resources identified with the value assumed by the "OUT" parameter will be directly connected to the circuit "VBAT" point.

3.10.8 ~SET IOV5LOAD_OUT_B

The ~SET IOV5LOAD_OUT_B instruction is used inside functional programs to set the operation mode of the OUT_B resources.

~SET IOV5LOAD_OUT_B [**OUT=***value*], [**STATUS=***option*]

OUT=*value* **[0÷80, default: 0]**
It identifies the OUT_B resource, available with the IOV5LOAD board, which will be programmed with the mode defined with the "STATUS" parameter of this function.

STATUS= *option* **[PULLUP|GND|PULLDOWN|VBAT, default:PULLDOWN]**
The parameter defines the operation mode of the "OUT_A" resource :

PULLDOWN|1	the resource identified with the value assumed by the "OUT" parameter will be connected to the system physical ground through a pull-down resistance of 1KΩ.
GND|2	the resource identified with the value assumed by the "OUT" parameter will be directly connected to the system physical ground.
PULLUP|5	the resource identified with the value assumed by the "OUT" parameter will be connected to the "VBAT" point through a pull-up resistance of 1KΩ.
VBAT|10	the resource identified with the value assumed by the "OUT" parameter will be directly connected to the circuit "VBAT" point.

3.10.9 ~SET IOV5LOAD_OUT_LOAD

The ~SET IOV5LOAD_OUT_LOAD instruction is used inside functional programs to set the operation mode of the OUT_LOAD resources.

~SET IOV5LOAD_OUT_LOAD [**LOAD=***value*], [**OHM=***value***]**, [**ON_OFF=***value*]

LOAD=*value* **[0÷80, default: 0]**
It identifies the OUT_LOAD resource, available with the IOV5LOAD boards, which will be programmed with the value defined with the "OHM" parameter of this function.

OHM= *value* **[0÷1.048.575, default: 1.048.575]**
The parameter defines the value of the resistance identified with the value assumed by the "LOAD" parameter.

ON_OFF= *option* **[OFF|ON, default: OFF]**
The parameter defines if the resource will be available outside the IOV5LOAD board. The parameter can assume the values OFF or ON:

OFF | 0	the load won't be available ouside the IOV5LOAD board.
ON | 1	the load will be available outside the IOV5LOAD board.

3.10.10 ~MEAS IOV5LOAD_OUT_LOAD

The ~MEAS IOV5LOAD_OUT_LOAD instruction is used inside functional programs to read the programming value of the OUT_LOAD outputs of the IOV5LLOAD board.

~MEAS RD_HD **[INTO=***variable***] [LOAD=***value***|]**

INTO= *variable* It indicates the variable used for the read value. If there isn't any variable indicated, the result is stored in AR.

LOAD=*value* **[0÷80, default: 0]**
It identifies the LOAD resource, available with the IOV5LOAD boards, that will be read.

3.10.11 ~SET IOV5LOAD_OUT_ANA

The ~SET IOV5LOAD_OUT_LOAD instruction is used inside functional programs to set the operation mode of the OUT_ANA resources.

~SET IOV5LOAD_OUT_LOAD [**ANALOG=***value*], [**V=***value***]**

ANALOG=*value* **[0÷64, default: 0]**
It identifies the OUT_ANA resource, available with the IOV5LOAD boards, which will be programmed with the value defined with the "V" parameter of this function.

V= *value* **[0÷12, default: 0]**
The parameter defines the voltage value of the output identified with the "LOAD" parameter.

3.10.12 ~SET IOV5LOAD_OUT_OPTO

The ~SET IOV5LOAD_OUT_OPTO instruction is used inside functional programs to set the operation mode of the OUT_OPTO resource.

~SET IOV5LOAD_OUT_LOAD [**OUT=***value*], [**STATUS=OFF|ON]**

OUT=*value* **[0÷128, default: 0]**
It identifies the OUT_OPTO resource, available with the IOV5LOAD boards, which will be programmed with the value defined with the "STAUS" parameter of this function.

STATUS= *option* **[OFF|ON, default: OFF]**
The parameter defines if the resource will be available inside the IOV5LOAD board. The parameter can assume the values OFF or ON:

OFF | 1 The "open collector" resource identified with the "OUT" parameter will be an open circuit.

ON | 0 The "open collector" resource identified with the "OUT" parameter will be a closed circuit.

3.10.13 ~SET PWn

The instruction ~SET PWn is used in function programs to set the user power settings managed through the SE2 module.

~SET PWn [**V=***value*] [**I=** *value*] [**DLY=** *value*] [**ON|OFF**] [**SENSEON|SENSEOFF**] [**EXT|INT**]
[**IL**] [**PREPARE**] ;
o

~SET PW N=n [**V=** *value*] [**I=** *value*] [**DLY=** *value*] [**ON|OFF**] [**SENSEON|SENSEOFF**] [**EXT|INT**]
[**PREPARE**] ;

n	Number going from 1 to 16, which identifies the power supply.
V= *value*	Indicates the setting value of voltage supplied by the power sully, expressed in Volt.
I= *value*	Indicates the setting value of the current supplied by the power supply, expressed in mA.
DLY= *value*	Indicates the power supply delay time value, expressed in ms. It's the time passing from the starting of the power supply and the next instruction execution. If the parameter is not specified, the default value for the delay time is 200ms (DLY=200)
ON	The power supply is turned on. (default option)
OFF	The power supply is turned off.
SENSEON	Indicates External SENSE that is connection performed on the FIXTURE or on the UUT.
SENSEOFF	Indicates Internal SENSE that is connection performed into the system: in particular, the SENSE wire is connected into the SE2 service board.
EXT	Indicates External POWER and SENSE, that is on the FIXTURE or on the UUT.
INT	Indicates Internal POWER and SENSE, that is into the system: the POWER and SENSE wires are connected into the SE2 service board.
IL	If present, sets the power supply limited in current and the limit is the one indicated with the parameter "**I=** *value*".
PREPARE	Indicates that the power supply is set according to the instruction's parameters, but the execution of **ON** or **OFF** instructions is performed with next instruction (kind **~SET PWn [ON|OFF].**) execution

P.S. If none of the ON or OFF parameters is specified, the instrument is set to ON.

3.10.14 ~MEAS PWn

The instruction ~MEAS PWn is used in the functional programming to read the voltage and tension values supplied by the user power settings set through the SE2 module.

~MEAS PWn [I|V], [EXT|INT] [DIG];

n	Number going from 1 to 16 to which identifies the power supply.
I	Indicates that a current measurement is executed on the power supply.
V	Indicates that a voltage measurement is executed on the power supply.
EXT	Indicates that the measurement is executed on the power setting outlet.
INT	Indicates that the measurement is executed on the SE2 service board
DIG	Indicates that the measurement is executed through the ADC converter (located on the SE2 service board). The lack of this parameter indicates that the measurement is executed with the ACL module meter.

3.11 Digital Channels - LOGIC-

The LOGIC instrument is an instrument on the ACL module consisting of four bi-directional digital channels with a tri-state output with these characteristics:

- programmable VOH/VOL/VIH/VIL +/-12V
- IOH/IOL max 500 mA
- frequency max 10 MHz
- driver channel memory 32Kbit
- sensor channel memory 32Kbit
- Programmable clock generator

The following functions have been provided to use this instrument in the functional programs:

~SET LOGIC_LEVEL	Definition of voltage values for channel drivers and sensors.
~SET LOGIC_MODE	Definition of data flow and physical connection of channels.
~SET LOGIC	Channel read and write in static mode.

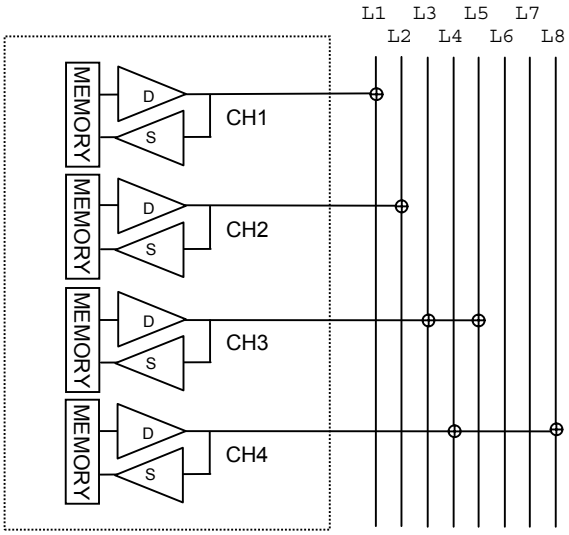

Fig. 3-21 - ACL module: Internal instrument Digital Channels

3.11.1 ~SET LOGIC_LEVEL

The ~SET LOGIC_LEVEL instruction is used in functional programs to define the voltage values for the high and low levels of the driver channels (VOH, VOL) and the voltage values for the high and low thresholds of the sensor channels (THH, THL).

~SET LOGIC_LEVEL [IH=*value*], [IL=*value*], [OH=*value*], [OL=*value*],

IH=*value* **[-12÷+12V, default: 2.4V]**
This defines the voltage value for the high level of the driver channels in Volts.

IL=*value* **[-12÷+12V, default: 0V]**
This defines the voltage value for the low level of the driver channels in Volts.

OH=*value* **[-12÷+12V, default: 1.2V]**
This defines the voltage value for the high level of the sensor channels in Volts.

OL=*value* **[-12÷+12V, default: 0.8V]**
This defines the voltage value for the low level of the sensor channels in Volts.

3.11.2 ~CLEAR LOGIC_LEVEL

The ~CLEAR LOGIC_LEVEL instruction is used in functional programs to program the channels to the default values indicated in the instruction SET LOGIC_LEVEL

~CLEAR LOGIC_LEVEL;

The ~CLEAR LOGIC_LEVEL instruction resets the instrument and set its parameters to the default value. Default values are indicated in Appendix A Tab. 4-1. (reference: the ~SET LOGIC_LEVEL instruction).

3.11.3 ~SET LOGIC_MODE

The ~SET LOGIC_MODE instruction is used in functional programs to defines the data flow to the four channels and the physical connection of the channels with the measure lines on the ACL module.

~SET LOGIC_MODE **[INP_CH1=DSP|RAM|CLKH_IMM|JTAG], [INP_CH2=DSP|RAM|CLK_PLL|JTAG] [INP_CH3=DSP|RAM|CLK_IMM|JTAG], [INP_CH4=DSP|RAM|CLK_PLL|JTAG] [OUT1=OUT1|L1], [OUT2=OUT2|L2], [OUT3=OUT3|L3], [OUT4=OUT4|L4] [CLK_PLL=*value*], [N_STEP=*value*], [PERIOD=*value*];**

INP_CH1=*option|value* **[DSP|RAM|CLK_IMM|JTAG, default: DSP]**

This parameter defines the source or internal destination of the channel CH1 data: The meaning of the four possible values of the parameter is as below:

DSP | 0 If the BURST parameter in the ~SET LOGIC instruction has the value OFF, the logic levels of the channel are defined with the CHi parameter of the ~SET LOGIC instruction.
If the BURST parameter in the ~SET LOGIC instruction has the value ON (run time DINAMICO), the logic levels of the channel are defined by a sequence of instructions preloaded into the DSP memory. (max. pattern size 64Kbytes). The channel is **bi-directional**.

RAM | 1 The RAM value for the INP_CH1 parameter is only significant in BURST mode (run time DINAMICO). For channel CH1 it indicates that the channel is used as a sensor. The read data is stored in bit 14 of the DSP RAM reserved for the acquisition buffer of the MEAS_V instrument. In this mode, the MEAS_V meter must be started to enable reading. The channel is always used as a **sensor**.

CLK_IMM | 2 The channel driver is programmed to emit a clock that is synchronous with the acquisition clock of the IMM instrument. The channel is always used as a **driver**.

JTAG | 3 The channel is programmed to operate as a driver. The data comes from the CLK signal defined in the IEEE 1149 standard related to JTAG technology. (pin JTI0 on the JTAG connector on the ACL module). The channel is always used as a **driver**.

INP_CH2=*option|value* **[DSP|RAM|CLK_PLL|JTAG, default: DSP]**

This parameter defines the source or internal destination of the channel CH2 data: The meaning of the four possible values of the parameter is as below:

DSP | 0 If the BURST parameter in the ~SET LOGIC instruction has the value OFF, the logic levels of the channel are defined with the CHi parameter of the ~SET LOGIC instruction.
If the BURST parameter in the ~SET LOGIC instruction has the value ON (run time DINAMICO), the logic levels of the channel are defined by a sequence of instructions preloaded into the DSP memory. The channel is **bi-directional**.

RAM | 1 The RAM value for the INP_CH2 parameter is only significant in BURST mode (run time DINAMICO). For channel CH2 it indicates that the channel is used as a sensor. The read data is stored in bit 15 of the DSP RAM reserved for the acquisition buffer of the MEAS_V instrument. In this mode, the MEAS_V meter must be started to enable reading. The channel is always used as a **sensor**.

CLK_PLL | 2 The channel driver is programmed to emit a clock that is synchronous with the clock generated by the PLL on the ACL module. The channel is always used as a **driver**.

JTAG | 3 The channel is programmed to operate as a driver. The data comes from the TMS signal defined in the IEEE 1149 standard related to JTAG technology. (pin JTI1 on the JTAG connector on the ACL module). The channel is always used as a **driver**.

INP_CH3=*option|value* **[DSP|RAM|CLK_IMM|JTAG, default: DSP]**

This parameter defines the source or internal destination of the channel CH3 data: The meaning of the four possible values of the parameter is as below:

DSP | 0 If the BURST parameter in the ~SET LOGIC instruction has the value OFF, the logic levels of the channel are defined with the CHi parameter of the ~SET LOGIC instruction.
If the BURST parameter in the ~SET LOGIC instruction has the value ON (run time DINAMICO), the logic levels of the channel are defined by a sequence of instructions stored in a file and preloaded into the DSP memory. The channel is **bi-directional**.

RAM | 1 The RAM value for the INP_CH3 parameter is only significant in BURST mode (run time DINAMICO). For channel CH3 it indicates that the channel is used as a sensor. When used as a driver, bits 14 and 15 of the RAM reserved for the DRA driver are used: bit 14 will be used for the output signal and bit 15 to control the Driver/Sensor switching of the channel. When used as a sensor, the read data is stored in the DSP RAM in bit 14 of the MEAS_I instrument acquisition buffer. In this mode, BURST from RAM, the DRA generator and MEAS_I meter must be synchronously started to enable reading. The channel is **bi-directional**.

CLK_IMM | 2 The channel driver is programmed to emit a clock that is synchronous with the acquisition clock of the IMM instrument. The channel is always **driver**.

JTAG | 3 The channel is programmed to operate as a driver. The data comes from the TDI signal defined in the IEEE 1149 standard related to JTAG technology. (pin JTI2 on the JTAG connector on the ACL module). The channel is always used as a **driver**.

INP_CH4=*option|value* **[DSP|RAM|CLK_PLL|JTAG, default: DSP]**

This parameter defines the source or internal destination of the channel CH4 data: The meaning of the four possible values of the parameter is as below:

DSP | 0 If the BURST parameter in the ~SET LOGIC instruction has the value OFF, the logic levels of the channel are defined with the CHi parameter of the ~SET LOGIC instruction.
If the BURST parameter in the ~SET LOGIC instruction has the value ON (run time DINAMICO), the logic levels of the channel are defined by a sequence of instructions stored in a file and preloaded into the DSP memory. The channel is **bi-directional**.

RAM | 1 The RAM value for the INP_CH4 parameter is only significant in BURST mode (run time DINAMICO). For channel CH4 it indicates that the channel is used as a driver and a sensor. When used as a driver, bits 14 and 15 of the RAM reserved for the DRB driver are used: bit 14 will be used for the output signal and bit 15 to control the Driver/Sensor switching of the channel. When used as a sensor, the read data is stored in the DSP RAM in bit 15 of the MEAS_I instrument acquisition buffer. In this mode, BURST from RAM, the DRB generator and MEAS_I meter must be synchronously started to enable reading. The channel is **bi-directional**.

CLK_PLL | 2 The channel driver is programmed to emit a clock that is synchronous with the clock generated by the PLL on the ACL module. The channel is always used as a **driver**.

JTAG | 3 The channel is programmed to operate as a sensor. The data comes from the TDO signal defined in the IEEE 1149 standard related to JTAG technology. (pin JT01 on the JTAG connector on the ACL module). The channel is always used as a **sensor**.

OUT_CH1=*option|value* **[NONE|L1, default: NONE]**
This parameter defines the physical connection between the CH1 channel and the measure lines on the ACL module. The parameter may have the following values:

NONE | 0	Channel CH1 is not connected to measure lines.
L1 | 1	Channel CH1 is connected to measure line L1.

OUT_CH2=*option|value* **[NONE|L2, default: NONE]**
This parameter defines the physical connection between the CH2 channel and the measure lines on the ACL module. The parameter may have the following values:

NONE | 0	Channel CH2 is not connected to measure lines.
L2 | 2	Channel CH2 is connected to measure line L2.

OUT_CH3=*option|value* **[NONE|L3|L5, default: NONE]**
This parameter defines the physical connection between the CH3 channel and the measure lines on the ACL module. The parameter may have the following values:

NONE | 0	Channel CH3 is not connected to measure lines.
L3 | 3	Channel CH3 is connected to measure line L3.
L5 | 5	Channel CH3 is connected to measure line L5.

OUT_CH4=*option|value* **[NONE|L4|L8, default: NONE]**
This parameter defines the physical connection between the CH4 channel and the measure lines on the ACL module. The parameter may have the following values:

NONE | 0	Channel CH4 is not connected to measure lines.
L4 | 4	Channel CH4 is connected to measure line L4.
L8 | 8	Channel CH4 is connected to measure line L8.

PLL_FREQ=*value* **[1÷+10,000,000Hz, default: 500,000Hz]**
This parameter defines the frequency of the clock generated by the PLL on the ACL module and emitted by the channel when the INP_CHi parameter of the channel has the value CLK_PLL.

N_STEP=*value* **[0X0000÷0XFFFF, default: 0X0000]**
This parameter defines the length of the file containing the instructions preloaded into the DSP memory. The parameter is expressed as a hexadecimal number and may have values in the 0001÷FFFF range.
The default value for the N_STEP parameter is 0 and means that it is in static mode with instructions residing in the main PC memory.

PERIOD=*value* **[0.000005÷1, default: 0.0000016sec]**
In STATIC mode, the parameter defines the standby time between enabling the driver and reading the channel status.
In DYNAMIC mode, the parameter defines the time required for scanning the instructions preloaded into the DSP memory. In this mode, the parameter defines the pattern execution speed.

The following figures show the data flow and physical connections of channel CH3 in DYNAMIC mode.

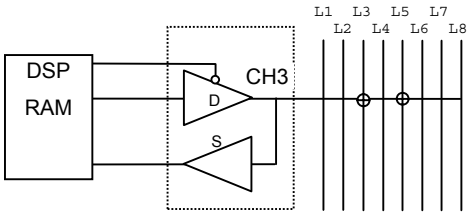

Fig. 3-22 - ACL module: CH3 burst from DSP-RAM

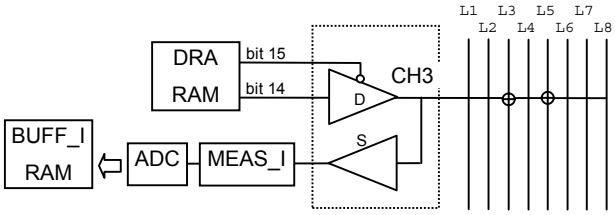

Fig. 3-23 - ACL module: CH3 burst from DRA-RAM

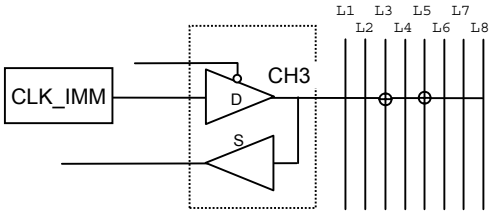

Fig. 3-24 - ACL module: CH3 burst from CKH1

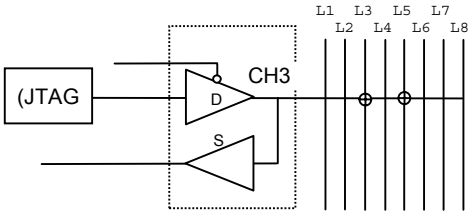

Fig. 3-25 - ACL module: CH3 burst from JTAG

3.11.4 ~CLEAR LOGIC_MODE

The ~CLEAR LOGIC_MODE instruction sets the parameters of the ~SET LOGIC_MODE instruction to the default values.

~CLEAR LOGIC_MODE;

The ~CLEAR LOGIC instruction resets the instrument and set its parameters to the default value. Default values are indicated in Appendix A Tab. 4-1 (reference: the ~SET LOGIC_MODE instruction).

3.11.5 ~SET LOGIC

The ~SET LOGIC instruction is used in functional programs to read or write the digital channels on the ACL module and define the functional program execution environment.

~SET LOGIC **[CH1=IL|IH|ML|MH|OL|OH|OM], [CH2= IL|IH|ML|MH|OL|OH|OM], [CH3= IL|IH|ML|MH|OL|OH|OM], [CH4= IL|IH|ML|MH|OL|OH|OM], [PERIOD=*value*] ,[BURST=OFF|ON];**

CHi=*option|value* **[IL|IM|ML|MH|OL|OH|OM, default: IL]**
This parameter indicates the channel operating mode (driver or sensor) and the related logic levels (0 or 1). CHi can have the following values: CH1, CH2, CH3 and CH4 and for each channel, the meaning of the four possible values of the parameter is as below:

IL | 0 The channel is programmed to operate as a driver. Logic level 0 i.e. the voltage value defined with the VOL parameter with the ~SET LOGIC_LEVEL instruction is forced on the driver. The channel is programmed to operate in **controlled mode**. In other words, after enabling the driver, the channel is switched to sensor to check that the level forced on the driver has been reached. On the channel that has switched to sensor, reading will occur after the time defined with the PERIOD parameter.

IH | 1 The channel is programmed to operate as a driver. Logic level 1 i.e. the voltage value defined with the VOH parameter with the ~SET LOGIC_LEVEL instruction is forced on the driver. The channel is programmed to operate in **controlled mode**. In other words, after enabling the driver, the channel is switched to sensor to check that the level forced on the driver has been reached. On the channel that has switched to sensor, reading will occur after the time defined with the PERIOD parameter.

ML | 4 The channel is programmed to operate as a driver. Logic level 0 i.e. the voltage value defined with the VOL parameter with the ~SET LOGIC_LEVEL instruction is forced on the driver. The channel is programmed to operate in **uncontrolled mode**. In other words, after enabling the driver, the control is not performed if the level forced on the driver has been reached.

MH | 5 The channel is programmed to operate as a driver. Logic level 1 i.e. the voltage value defined with the VOH parameter with the ~SET LOGIC_LEVEL instruction is forced on the driver. The channel is programmed to operate in **uncontrolled mode**. In other words, after enabling the driver, the control is not performed if the level forced on the driver has been reached.

OL | 2 The channel is programmed to operate as a sensor. Presence of the logic level 0 i.e. a voltage that is lower or equal to the value defined with the THL parameter with the ~SET LOGIC_LEVEL instruction is checked on the sensor.

OH | 3 The channel is programmed to operate as a sensor. Presence of logic level 1 i.e. a voltage that is higher than or equal to the value defined with the THL parameter with the ~SET LOGIC_LEVEL instruction is checked on the sensor.

OM | 6 The channel is programmed to operate as a sensor. On the sensor the presence of a logic value is not checked, i.e. the channel is not in driver mode and the logic level is not checked and for the test system, the channel is in tristate.

PERIOD=*value* **[0.000005÷1, default: 0.0000016sec]**

In STATIC mode, the parameter defines the standby time between enabling the sensor and reading the channel status.

In DYNAMIC mode, the parameter defines the time required for scanning the instructions preloaded into the DSP memory. In this mode, the parameter defines the pattern execution speed. The parameter is expressed in seconds and may have values in the 0.000005÷10 range.

BURST=*option|value* **[OFF|ON, default: OFF]**

This parameter defines the functional program execution mode for the channel. A functional program can be executed in STATIC or DYNAMIC mode.

In STATIC mode the program consists of instructions residing in the main PC memory executed sequentially one at a time.

In DYNAMIC mode, the program is first preloaded into the DSP memory that controls the ACL module and then executed in BURST mode i.e. like an uninterruptible set of instructions. For execution in DYNAMIC mode, the program can be preloaded into two separate memory areas: or in a memory area reserved for the program or the memory area reserved for the DRA and DRB generators. The BURST parameter may have the following values:

OFF | 0 This defines the STATIC execution mode. The channels are controlled with the values specified with the CHi parameter of the ~SET LOGIC instruction residing in the Main PC memory.

ON | 1 This defines the DYNAMIC execution mode. If the program has been preloaded into the area reserved for the program or pattern file, it activates program execution. If the program has been preloaded into the memory area reserved for the DRA and

	DRB generators, the program will start when the generators start at the same time as the meters.
SW1 | 3	The software trigger SW1 signal is generated. The signal is synchron with the starting of the preloaded program in the reserved area for the program, or pattern file.

3.11.6 ~CLEAR LOGIC

The ~CLEAR LOGIC instruction sets the parameters of the ~SET LOGIC_MODE instruction to the default values

~CLEAR LOGIC;

The ~CLEAR LOGIC instruction resets the instrument and set its parameters to the default value. Default values are indicated in Appendix A Tab. 4-1 (reference: the ~SET LOGIC instruction).

3.11.7 ~MEAS LOGIC

The ~MEAS LOGIC instruction is used to check the status of the four digital channels on the ACL module.

~MEAS LOGIC [INTO *variable***];**

INTO *variable* Indicates the variable that the measured value will be inserted in. If no variable is indicated, the measurement results are inserted in the AR variable. The *variable* parameter is a 16 bit word and its 16 bits describe the status of the four digital channels of the LOGIC instrument. Bit from 0 to 7 describe the programming status sent to the LOGIC intsrument with the ~SET LOGIC instruction. Bit from 8 to 15 describe the programming status of the four digital channels read from the instrument. That is, when a ~MEAS LOGIC instruction is executed.

BIT[1:0] indicate CH1 last programming, with the following meaning:

00: CH1 programmed as driver low
01: CH1 programmed as driver high
10: CH1 programmed as sensor low
11: CH1 programmed as sensor high

BIT[3:2] indicate CH2 last programming, with the following meaning:

00: CH2 programmed as driver low
01: CH2 programmed as driver high
10: CH2 programmed as sensor low
11: CH2 programmed as sensor high

BIT[5:4] indicate CH3 last programming, with the following meaning:

00: CH3 programmed as driver low
01: CH3 programmed as driver high
10: CH3 programmed as sensor low
11: CH3 programmed as sensor high

BIT[7:6] indicate CH4 last programming, with the following meaning:

00: CH4 programmed as driver low
01: CH4 programmed as driver high

10: CH4 programmed as sensor low
11: CH4 programmed as sensor high

BIT[9:8] indicate the status READ from CH1 channel with the following meaning:

10: CH1 found low
01: CH1 found high
11: CH1 found at a value that is lower than the high sensor level and upper than the low sensor level.
00: CH1 found lower than the low sensor level and upper that the high sensor level simultaneously. This is an error condition (*) because it is not possible to assign a logic value to the channel.

BIT[11:10] indicate the status READ from CH2 channel with the following meaning:

10: CH2 found low
01: CH2 found high
11: CH2 found at a value that is lower than the high sensor level and upper than the low sensor level.
00: CH2 found lower than the low sensor level and upper that the high sensor level simultaneously. This is an error condition (*) because it is not possible to assign a logic value to the channel.

BIT[13:12] indicate the status READ from CH3 channel with the following meaning:

10: CH3 found low
01: CH3 found high
11: CH3 found at a value that is lower than the high sensor level and upper than the low sensor level.
00: CH3 found lower than the low sensor level and upper that the high sensor level simultaneously. This is an error condition (*) because it is not possible to assign a logic value to the channel.

BIT[15:14] indicate the status READ from CH4 channel with the following meaning:

10: CH4 found low
01: CH4 found high
11: CH4 found at a value that is lower than the high sensor level and upper than the low sensor level.
00: CH4 found lower than the low sensor level and upper that the high sensor level simultaneously. This is an error condition (*) because it is not possible to assign a logic value to the channel.

(*) This condition can occur when the distance between the OH and OL values (defined with the ~SET LOGIC_LEVEL) is very little. This condition is always present if the OH value is programmed lower that the OL value.

3.12 Data exchange between MAIN COMPUTER and ACL DSP MODULE

On the ACL module (ACL DSP module) we use two kinds of memory: FLASH MEMORY and RAM.
For the data exchange between MAIN COMPUTER and ACL DSP MODULE we have four functions available:

~SET FLASH for writing operations in the flash memory.
~GET FLASH for reading operation in the flash memory.
~SET RAM_EXT for writing operations in the RAM.
~GET RAM_EXT for reading operation in the RAM.

3.12.1 ~SET FLASH

The ~SET FLASH instruction is used inside functional programs to write data in the flash memory of the DSP.
The Flash memory is divided in a no. of segments of 32 Kword identified by symbolic names (TARAT, SINE, TRI, RECT, ARB1, ARB2, ARB3, ARB4, ARB5, ARB6, ARB7, ARB8, ARB9, ARB10, VECT1, VECT2, VECT3, VECT4, VECT5, VECT6, VECT7, VECT8, VECT9, VECT10). For each segment it is possible to define the offset inside the segment and the quantity of data to transfer.

~SET FLASH **[DATATOSET= TARAT|SINE|TRI|RECT|ARB1|ARB2|ARB3|ARB4|ARB5|ARB6|ARB7|ARB8|ARB9|ARB10|VECT1|VECT2|VECT3|VECT4|VECT5|VECT6|VECT7|VECT8|VECT9|VECT10] [OFFSET=*value*] [NSAMPLE=*value*] [CONVERSION=*0*|*1*] [DATA=*value*]**

DATATOSET = *option|value* **[TARAT|SINE|TRI|RECT|ARB1|ARB2|ARB3|ARB4|ARB5|ARB6|ARB7|ARB8|ARB9|ARB10|VECT1|VECT2|VECT3|VECT4|VECT5|VECT6|VECT7|VECT8| VECT9|VECT10, default: TARAT]**
It defines the segment of the flash memory to write. The segment name identifies the waveform which will be used in the normal functioning of the DRA and DRB instruments, with the WAVE parameter of the ~SET DRA and ~SET DRB instructions. The waveforms can be described with a maximum of 32 Kwords. The values which can be assumed by the parameter are:

TARAT | 0	It identifies the flash memory segment that contains the last ACL calibration data.
SINE | 1	It identifies the flash memory segment that contains the sine waveform.
TRI | 2	It identifies the flash memory segment that contains the triangular waveform.
RECT | 3	It identifies the flash memory segment that contains the square waveform.
ARB1÷ARB10| |4|5|6|7|8|9|10|11|12|13	It identifies the flash memory segment that contains the arbitrary waveforms: **ARB1÷ARB10**, used in the DRA and DRB instrument to generate waveforms with the DDS technique.
VECT1÷VECT10| |14|15|16|17|18|19| 20|21|22|23	It identifies the flash memory segment that contains the arbitrary waveforms: **VECT1÷VECT10**, used in the DRA and DRB instrument to generate waveforms with the PPC technique.

OFFSET= *value* **[0÷2^{15}, default: 0]**
It defines the offset, with respect to the segment start. The offset identifies the beginning of the data which will be written in the flash memory.

NSAMPLE= *value* **[0÷2^{15} A, default: 0x8000]**
It defines the quantity of data which will be transferred, starting from the address defined with the "OFFSET"parameter. The parameter unit of measure is the number of transferred words and it can assume values in the range: 0÷2^{15} (0x0000÷0x8000).

CONVERSION= *option* **[0|1, default: 0]**

It defines if the DATA buffer conversion must be executed before the transfer or not. The data conversion will be from 16 bit format to 14 bit format. The "CONVERSION" parameter can assume the following values:

0 The data contained in the MAIN COMPUTER memory are transferred without executing any conversion.
1 The data contained in the MAIN COMPUTER memory are converted to 14 bit format before beeing transferred in the flash memory.

DATA= *value* **[integer array from 0 to 65.536 elements, default: 0]**
It defines the buffer containing the data which has to be transferred. The buffer will have a maximum dimension of 65.536 data of 16 bit.

3.12.2 ~GET FLASH

The ~GET FLASH instruction is used inside functional programs to read in the DSP flash memory.
The Flash memory is divided in a no. of segments of 32 Kwords identified by symbolic names (TARAT, SINE, TRI, RECT, ARB1, ARB2, ARB3, ARB4, ARB5, ARB6, ARB7, ARB8, ARB9, ARB10, VECT1, VECT2, VECT3, VECT4, VECT5, VECT6, VECT7, VECT8, VECT9, VECT10). For each segment it is possible to define the offset inside the segment and the quantity of the data to read.

~GET FLASH **[INTO=***variable***]**
[DATATOGET= TARAT|SINE|TRI|RECT|ARB1|ARB2|ARB3|ARB4|ARB5|ARB6|ARB7|ARB8|ARB9|ARB10|VECT1|VECT2|VECT3|VECT4|VECT5|VECT6|VECT7|VECT8|VECT9|VECT10] [ADDR=*value***] [NSAMPLE=***value***] [CONVERSION=*0*|*1*]**
[DATA=*value***]**

INTO= *variable* It indicates the variable in which the data read by the flash memory will be transferred. The variable will have to be a buffer destined to contain the data which has to be transferred. The buffer will have a maximum dimension of 65.536 data of 16 bit.

DATATOGET = *option|value* **[TARAT|SINE|TRI|RECT|ARB1|ARB2|ARB3|ARB4|ARB5|ARB6|ARB7|ARB8|ARB9|ARB10|VECT1|VECT2|VECT3|VECT4|VECT5|VECT6|VECT7|VECT8| VECT9|VECT10, default: TARAT]**
It defines the flash memory segment to read. The segment name identifies the address space containing the waveform used in the normal functioning of the DRA and DRB instrument, with the WAVE parameter of the ~SET DRA and ~SET DRB instructions. The waveforms are described by 32 KWs of values.
The values that the parameter can assume are the following:

TARAT | 0	It identifies the flash memory segment that contains the ACL last calibration data.
SINE | 1	It identifies the flash memory segment that contains the sine waveform.
TRI | 2	It identifies the flash memory segment that contains the triangular waveform.
RECT | 3	It identifies the flash memory segment that contains the rectangular waveform.
ARB1÷ARB10| |4|5|6|7|8|9|10|11|12|13	It identifies the flash memory segment that contains the arbitrary waveforms: **ARB1÷ARB10**, used in the DRA and DRB instruments to generate waveforms with the DDS technique.
VECT1÷VECT10| |14|15|16|17|18|19| 20|21|22|23	It identifies the flash memory segment that contains the arbitrary waveforms: **VECT1÷VECT10**, used in the DRA and DRB instruments to generate waveforms with the PPC technique.

ADDR= *value* **[0÷2^{15} A, default: 0]**

It defines the offset, with respect to the segment start. The offset identifies the beginning of the data which will be read by the flash memory.

NSAMPLE= *value* **[0÷2^{15} A, default: 0x8000]**
It defines the quantity of the data which will be read, starting from the address defined with the "ADDR"parameter. The parameter unit of measure is the number of words transferred and it can assume values in the range: 0÷2^{15} (0x0000÷0x8000).

3.12.3 ~SET RAM_EXT

The ~SET RAM_EXT instruction is used inside functional programs to write in the DSP RAM.

~SET RAM_EXT [NOMEDISP=ACLAM|NOMEi] [STARTADDR=*value***]**
[NDATA=*value***] [SIZE=S32|S24|S16] [TYPE=INT|FLOAT] [DATA=***value***]**

NOMEDISP = *option* **[ACLAM|NOMEi, default: ACLAM]**
It defines the symbolic name for a generic "ACL DSP MODULE".
The default value assumed by the parameter is: "ACLAM".

STARTADDR= *value* **[0÷2^{24} -1, default: 0]**
It defines the RAM address from which you can start to write the data.

NDATA= *value* **[0÷65.535, default: 65.535]**
It defines the quantity of data which will be transferred, starting from the address defined with the "STARTADDR" parameter.

SIZE= *option* **[S32|S24|S16, default: S32]**
It defines the dimension of the data to transfer. The parameter can assume the following values:

S32 | 0	the data which will be transferred will have a length of 32 bit.
S24 | 1	the data which will be transferred will have a length of 24 bit.
S16 | 2	the data which will be transferred will have a length of 16 bit.

TYPE= *option* **[INT|FLOAT, default: INT]**
It defines the kind of data which will be transferred. The parameter can assume the following values:

INT|0	The transferred data are INTEGER.
FLOAT|1	The transferred data are FLOATIG POINT.

DATA= *value* **[integer array from 0 to 65.535 elements, default: 0]**
It defines the buffer containing the data which have to be trnsferred. The buffer has a maximum dimension of 65.535 data of 32 bit.

3.12.4 ~GET RAM_EXT

The ~GET RAM_EXT instruction is used inside functional programs to read in the DSP RAM.

~GET RAM_EXT [INTO=*variable*] [NOMEDISP=ACLAM|NOMEi] [STARTADDR=*value*] [NDATA=*value*] [SIZE=S32|S24|S16] [TYPE=INT|FLOAT] [DATA=*value*]

INTO= *variable*
It indicates the variable used for the data read from the RAM. The variable is a buffer that contains the data which have to be transferred. The buffer will have a maximum dimension of 65.536 data of 16 bit.

NOMEDISP = *option*
[ACLAM|NOMEi, default: ACLAM]
It defines the symbolic name that identifies a generic "ACL DSP MODULE".
The default value assumed by the parameter is "ACLAM".

STARTADDR= *value*
[0÷2^{24} -1, default: 0]
It defines the RAM address of the DSP from which you can start reading the data.

NDATA= *value*
[0÷65.535, default: 65.535]
It defines the quantity of data which will have to be read, starting from the address defined with the "STARTADDR" parameter.

SIZE= *option*
[S32|S24|S16, default: S32]
It defines the dimension of the data to read. The parameter can assume the following values:

S32 | 0	32 bit data.
S24 | 1	24 bit data.
S16 | 2	16 bit data.

TYPE= *option*
[INT|FLOAT, default: INT]
It defines the kind of data which will be transferred. The parameter can assume the following values:

INT | 0	The transferred data are INTEGER.
FLOAT | 1	The transferred data are FLOATING POINT.

DATA= *value*
[array di interi con dimensioni da 0 a 65.535 elementi, default: 0]
It defines the buffer which contains the data which have to be transferred. The buffer will have a maximum dimension of 65.536 data of 32 bit.

3.13 Compound instruments

The instruments described in the previous chapter are basic instruments used to directly test the UUT; i.e., they can be used to product the test inputs (stimuli) and effect the measurements of the corresponding outputs (replies) of the UUT.

The compound instruments described in this chapter are instruments simulated by routine firmware on the DSP that controls the module. In the test program it is possible to use high level instructions as **~MEAS RES, ~MEAS CAP etc.** These instruction connect automatically the single ACL generators and meters in a proper way so that the final result is an instrument that can be seen as a normal resistor meter, capacitor meter, etc. These simulated instruments simplify the programmer's task of controlling generating and measurement instruments by connecting them by way of the instrument matrix and the channel boards with the UUT. They also convert the measurements performed into resistance, capacitance and inductance values, continuity indicators or open circuit indicators by performing the necessary calculations at a higher speed than would be possible with the instructions executed in the Main PC memory.

With the firmware on the ACL module, the following more complex measurements are available.

- Resistance measurement **~MEAS RES**
- Capacitance measurement **~MEAS CAP**
- Inductance measurement **~MEAS IND**
- Junction measurement **~MEAS JUN**
- Short-circuit measurement. **~MEAS SHORT**
- Contact measurement **~MEAS CONTACT**

The measurements performed with these instruments are different from those for current and voltage because a quantity must be measured, resistance, capacitance inductance, etc., that is a physical property of the component that requires measuring. To measure the value of this quantity, the component must be electrically activated by applying an external electromotive force source that allows current circulation or by injecting a current circulation that detects voltage drops on the component.

Since the measurements are performed "in-circuit", i.e. with the component to be measured placed in a circuit consisting of other components, insulation techniques must be adopted to prevent the other components from altering the measurement. The insulation technique used in this type of measurement is called guarding and can be active or passive according to the type of generator applied to the component.

Active guarding: the generator used is a current generator and the measurement performed is a voltage measurement. Fig. 3-26 - ACL module: Component measurement and guarding

indicates that this insulation technique involves taking the guarding points to the same potential as the current generator so that the current circulating in ZG1 is zero and all the current supplied by the generator circulates in ZX.

Passive guarding: the generator used is a voltage generator and the measurement performed is a current measurement. Fig. 3-26 - ACL module: Component measurement and guarding

indicates that this insulation technique involves taking the guarding points to the same potential as the current generator return pole. Since the current meter has zero internal resistance, the two ZG2 poles will have the same potential, the current circulating in ZG2 will be zero and the current circulating in ZX will be the current measured by the current meter.

In Fig. 3-12:

Z_X represents the component that must be measured.
Z_{G1} Represents all the surrounding components that if not insulated may absorb some of the current supplied by the generator.
Z_{G2} Represents all the surrounding components that if not insulated may cause current circulation so that the current value measured by the meter is different from the value of the current circulating in Z_X.
CHN3 Identifies the sensing point of the CHN1 point that a component pole to be measured is connected to. In the figure on the left, it is connected to the voltage meter.
CHN4 Identifies the sensing point of the CHN2 point that the other component pole to be measured is connected to. In the figure on the left, it is connected to the other pole on the voltage meter.

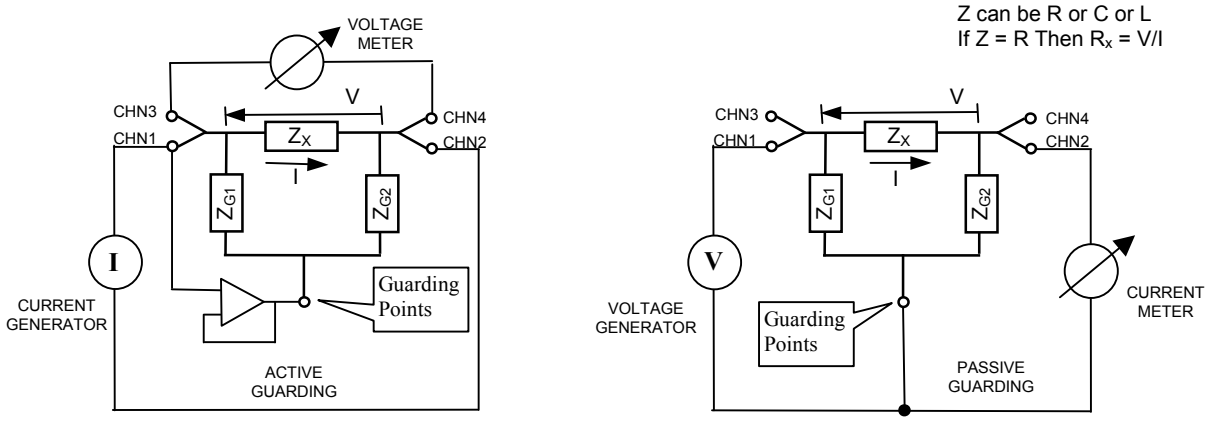

Fig. 3-26 - ACL module: Component measurement and guarding

Depending on the type of guarding set for the measurement, the type of generator and type of meter used will be automatically selected as well as the different programming of the instruments used for measuring.

The instructions for the measurement of resistances, capacitors, inductances, short circuits, insulation and diode and transistor junctions are described below. The component to be measured, the components to be insulated, the generators and the meters involved in all the types of measurements are shown in Fig. 3-26, whereas the various instructions define the characteristics of each type of measurement.

3.13.1 ~MEAS RES

The ~MEAS RES instruction is used in test programs to measure the resistance values of the components expressed in Ohm. The measurement can be performed with 2 or 4 wires without guarding or with 3 or 6 wires with guarding.

~MEAS RES **[INTO** *variable***]** **[VAL=***value***]** **[CH1=***value***]** **[CH2=***value***]** **[CH3=***value***]** **[CH4=***value***]**
[MODE=DC_ACTIVE|DC_PASSIVE|AC_PASSIVE]
[WIRE=2WIRE|3WIRE|4WIRE|6WIRE][TIME/FREQ=*value***]** **[V=***value***]**
[QUALITY=*value***][DELAY_MEAS=***value***][C_SER=***value***]** **[C_PAR=***value***]** **[L_SER=***value***]**
[L_PAR=*value***][RES_GUA_CH1=***value***]** **[RES_GUA_CH2=***value***]** **[CAP_GUA_CH1=***value***]**
[CAP_GUA_CH2=*value***];**

INTO *variable* Indicates the variable that the measured value will be inserted in. If no variable is indicated, the measurement results are inserted in the AR variable.

VAL=*value* **[0.001÷100,000,000 Ω, default: 1.000 Ω]**
This parameter indicates the expected value of the resistor that requires measuring. The parameter is expressed in Ω and may have values in the 0.001÷100.000.000 range. The generator and meter used for the measurement will be programmed according to the function of the expected value indicated with the VAL parameter.

CH1=*value* **[0÷8,192, default: 0]**
This parameter indicates the channel connected to the positive terminal of the resistor that requires measuring where positive refers to the pole connected to the generator that stimulates the component by injecting current or applying voltage. The parameter is expressed as a whole number and may have values in the 0÷8,192 range. The default value for the CH1 parameter is 0 and means no channel is used.

CH2=*value* **[0÷8,192, default: 0]**
This parameter indicates the channel connected to the negative terminal of the component that requires measuring where negative refers to the terminal opposite the positive terminal on the component that requires measuring. The parameter is expressed as a whole number and may have values in the 0÷8,192 range. The default value for the CH2 parameter is 0 and means no channel is used.

CH3=*value* **[0÷8,192, default: 0]**
This parameter indicates the channel connected to the positive terminal of the voltage meter that for measurements performed with 4 or 6 wires is connected to the positive pole of the resistor that requires measuring. For measurements performed with 2 and 3 wires, the voltage meter is internally connected to the generator that stimulates the component that requires measuring. The parameter is expressed as a whole number and may have values in the 0÷8,192 range. The default value for the CH3 parameter is 0 and means no channel is used.

CH4=*value* **[0÷8,192, default: 0]**
This parameter indicates the channel connected to the negative terminal of the voltage meter that for measurements performed with 4 or 6 wires is connected to the negative pole of the resistor that requires measuring. For measurements performed with 2 and 3 wires, the voltage meter is internally connected to the generator that stimulates the component that requires measuring. The parameter is expressed as a whole number and may have values in the 0÷8,192 range. The default value for the CH4 parameter is 0 and means no channel is used.

MODE=*option*|*value* **[DC_ACTIVE|DC_PASSIVE|AC_PASSIVE, default: DC_ACTIVE]**
This parameter indicates the measurement mode, i.e. the type of generator and type of guarding used. The parameter has three possible values:

DC_ACTIVE | 0 Resistance will be measured with a DC current generator and, if the parameter that indicates the number of lines used for measurement is set for 3 or 6 wires, active guarding will be used.

DC_PASSIVE | 1 Resistance will be measured with a DC current generator and, if the parameter that indicates the number of lines used for measurement is set for 3 or 6 wires, passive guarding will be used.

AC_PASSIVE | 2 Resistance will be measured with an AC current generator and, if the parameter that indicates the number of lines used for measurement is set for 3 or 6 wires, passive guarding will be used.

WIRE=*option*|*value* **[2WIRE|3WIRE|4WIRE|6WIRE, default: 2WIRE]**
This parameter indicates the number of lines used for measurement. The parameter has four possible values:

2WIRE | 2 Measurement is performed with two wires, i.e. the meter is connected to the same channels used by the generator.

3WIRE | 3 Measurement is performed with three wires. Measurement is the same as that with two wires and a third wire is used for guarding.

4WIRE | 4 Measurement is performed with four wires, i.e. the meter is connected to the resistor that requires measuring by two channels that are different from those used by the generator. (Kelvin measurement)

6WIRE | 6 Measurement is performed with six wires. Measurement is the same as that with four wires, a fifth wire is used for guarding and a sixth wire used for guarding sensing.

The default value for the WIRE parameter is 2WIRE.

TIME/FREQ=*value* **[0.01÷100,000, default: 0]**

This parameter indicates a value forced by the user with a meaning that varies according to the type of generator used. The parameter indicates in particular:

- duration of measurement if the generator used is a DC generator i.e. if the MODE parameter is set with the values DC_ACTIVE or DC_PASSIVE. The parameter may have values in the 0.01÷1000 range and the unit of measurement used is ms.
- frequency of the generator if the generator used is an AC generator i.e. if the MODE parameter is set with the value AC_PASSIVE. The parameter may have values in the 0.001÷100 range and the unit of measurement used is KHz.

For the <value> syntax refer to If the value set is 0 the value will be automatically calculated by the function according to the other instruction parameters. If the value is not 0, it will be used for the measurement.

VOLT=*value* **[0.1÷100V, default: 0]**

This parameter indicates the voltage value used for measuring resistance. If the generator used is a voltage generator, this value indicates the programming value of the generator. If the generator used is a current generator, this value, multiplied by 1.5, indicates the maximum value that can be measured with the voltage meter. The maximum value that can be measured divided by the expected resistance value (VAL parameter) determines the programming value of the generator. This multiplication by 1.5 is the result of a decision to calculate a maximum variation of 50% of the observed value compared with the expected value defined with the VAL parameter. If the value set is 0 the value will be calculated by the function. If the value is not 0, it will be used for the measurement.

QUALITY=*value* **[1÷100, default: 10]**

This parameter indicates the quality level of the measurement. The parameter is expressed as a number and may have values in the 1÷100 range. The result of a performed measurement is obtained as the arithmetic mean of the number of measurement samples performed. By increasing the value of the QUALITY parameter, the number of samples performed will increase and the quality of measurement will improve. Obviously, if the value of the QUALITY parameter is increased, the time required to perform measurements will also increase.

NOISE=*value* **[0÷100, default: 0]**

This parameter is used to change the delay time before the start of acquisition of the measurement samples. The parameter is expressed as a number and may have values in the 0÷100 range. Usually, after applying stimuli to the component that requires measuring, a delay is necessary before starting the measurements to quit the initial transitory states caused by the presence of parasitic capacitance and inductance on the ACL module and the UUT. If the value of the “NOISE” parameter is increased, the delay time will increase thus improving the accuracy of the measurement although the time necessary to perform the measurement will also increase.

C_SER =*value* **[0.000001÷1,000.000 µF, default: 0]**

This parameter indicates the capacitive value of the series-connected resistor that requires measuring. The parameter is expressed in µF, it may have values in the 0.000001÷1,000,000 range and must be expressed using the syntax in Tab. 3-1. The default value for the C_SER parameter is 0 and means the parameter is not active.

C_PAR =*value* **[0.00000001÷1,000,000 µF, default: 0]**

This parameter indicates the capacitive value of the parallel-connected resistor that requires measuring. The parameter is expressed in µF, it may have values in the 0.000001÷1,000,000 range and must be expressed using the syntax in Tab. 3-1. The default value for the C_PAR parameter is 0 and means the parameter is not active.

L_SER =*value* **[0.00000001÷1,000,000 µH, default: 0]**
This parameter indicates the inductive value of the series-connected resistor that requires measuring. The parameter is expressed in µH, it may have values in the 0.000001÷1,000,000 range and must be expressed using the syntax in Tab. 3-1. The default value for the L_SER parameter is 0 and means the parameter is not active.

L_PAR =*value* **[0.00000001÷1,000,000 µH, default: 0]**
This parameter indicates the inductive value of the parallel-connected resistor that requires measuring. The parameter is expressed in µH, it may have values in the 0.000001÷1,000,000 range and must be expressed using the syntax in Tab. 3-1. The default value for the L_SER parameter is 0 and means the parameter is not active.

RES_GUA_CH1=*value* **[1÷100,000,000 Ω, default: 0]**
This parameter indicates the expected resistance value of the surrounding components (Z_{G1}) that if not insulated may absorb some of the current supplied by the generator. The parameter is expressed in Ω and may have values in the 1÷100,000,000 range. The default value for the RESGUA_CH1 parameter is 0 and means the parameter is not active.

RES_GUA_CH2=*value* **[1÷100,000,000 Ω, default: 0]**
This parameter indicates the expected resistance value of the surrounding components (Z_{G2}) that if not insulated may cause current circulation so that the current value measured by the meter is different from the value of the current circulating in Z_X. The parameter is expressed in Ω and may have values in the 1÷100,000,000 range. The default value for the RESGUA_CH1 parameter is 0 and means the parameter is not active.

CAP_GUA_CH1=*value* **[0.001÷1,000,000 µF, default: 0]**
This parameter indicates the expected capacitive value of the surrounding components (Z_{G1}) that if not insulated may absorb some of the current supplied by the generator. The parameter is expressed in µF, it may have values in the 0.000001÷1,000,000 range and must be expressed using the syntax in Tab. 3-1. The default value for the CAPGUA_CH1 parameter is 0 and means the parameter is not active.

CAP_GUA_CH2=*value* **[0.001÷1,000,000 µF, default: 0]**
This parameter indicates the expected capacitive value of the surrounding components (Z_{G2}) that if not insulated may cause current circulation so that the current value measured by the meter is different from the value of the current circulating in Z_X. The parameter is expressed in µF, it may have values in the 0.000001÷1,000,000 range and must be expressed using the syntax in Tab. 3-1. The default value for the CAPGUA_CH2 parameter is 0 and means the parameter is not active.

3.13.2 ~MEAS CAP

The ~MEAS CAP instruction is used in test programs to measure the capacitive values of the components expressed in µF. The measurement can be performed with 2 or 4 wires without guarding or with 3 or 6 wires with guarding.

~MEAS CAP **[INTO** *variable***] [VAL=***value***] [CH1=***value***] [CH2=***value***] [CH3=***value***] [CH4=***value***]**
[MODE=DC_ACTIVE|AC_PASSIVE] [WIRE=2WIRE|3WIRE|4WIRE|6WIRE]
[TIME/FREQ=*value***] [V=***value***] [QUALITY=***value***][NOISE=***value***]**
[C_SER=*value***] [C_PAR=***value***] [RES_GUA_CH1=***value***][RES_GUA_CH2=***value***]**
[CAP_GUA_CH1=*value***] [CAP_GUA_CH2=***value***];**

INTO *variable* — Indicates the variable that the measured value will be inserted in. If no variable is indicated, the measurement results are inserted in the AR variable.

VAL= — **[0.000001÷1,000,000 µF, default: 0 µF**
This parameter indicates the expected value of the resistor that requires measuring. The parameter is expressed in µF, it may have values in the 0.000001÷1,000,000 range and must be expressed using the syntax in Tab. 3-1. The generator and meter used for the measurement will be programmed according to the function of the expected value indicated with the VAL parameter.

CH1=*value* — **[0÷8,192, default: 0]**
This parameter indicates the channel connected to the positive terminal of the capacitor that requires measuring where positive refers to the pole connected to the generator that stimulates the component by injecting current or applying voltage. The parameter is expressed as a whole number and may have values in the 0÷8,192 range. The default value for the CH1 parameter is 0 and means no channel is used.

CH2=*value* — **[0÷8,192, default: 0]**
This parameter indicates the channel connected to the negative terminal of the component that requires measuring where negative refers to the terminal opposite the positive terminal on the component that requires measuring. The parameter is expressed as a whole number and may have values in the 0÷8,192 range. The default value for the CH2 parameter is 0 and means no channel is used.

CH3=*value* — **[0÷8,192, default: 0]**
This parameter indicates the channel connected to the positive terminal of the voltage meter that for measurements performed with 4 or 6 wires is connected to the positive pole of the capacitor that requires measuring. For measurements performed with 2 and 3 wires, the voltage meter is internally connected to the generator that stimulates the component that requires measuring. The parameter is expressed as a whole number and may have values in the 0÷8,192 range. The default value for the CH3 parameter is 0 and means no channel is used.

CH4=*value* — **[0÷8,192, default: 0]**
This parameter indicates the channel connected to the negative terminal of the voltage meter that for measurements performed with 4 or 6 wires is connected to the negative pole of the capacitor that requires measuring. For measurements performed with 2 and 3 wires, the voltage meter is internally connected to the generator that stimulates the component that requires measuring. The parameter is expressed as a whole number and may have values in the 0÷8,192 range. The default value for the CH4 parameter is 0 and means no channel is used.

MODE=*option*|*value* — **[DC_ACTIVE|AC_PASSIVE, default: AC_PASSIVE]**
This parameter indicates the measurement mode, i.e. the type of generator and type of guarding used. The parameter has two possible values:
DC_ACTIVE | 0 Resistance will be measured with a DC current generator and, if the parameter that indicates the number of lines used for measurement is set for 3 or 6 wires, active guarding will be used.

AC_PASSIVE | 2 Resistance will be measured with an AC current generator and, if the parameter that indicates the number of lines used for measurement is set for 3 or 6 wires, passive guarding will be used.

WIRE=*option|value* **[2WIRE|3WIRE|4WIRE|6WIRE, default: 2WIRE]**

This parameter indicates the number of lines used for measurement. The parameter has four possible values:

2WIRE | 2 Measurement is performed with two wires, i.e. the meter is connected to the same channels used by the generator.

3WIRE | 3 Measurement is performed with three wires. Measurement is the same as that with two wires and a third wire is used for guarding.

4WIRE | 4 Measurement is performed with four wires, i.e. the meter is connected to the capacitor that requires measuring by two channels that are different from those used by the generator. (Kelvin measurement)

6WIRE | 6 Measurement is performed with six wires. Measurement is the same as that with four wires, a fifth wire is used for guarding and a sixth wire used for guarding sensing.

TIME/FREQ=*value* **[0.01÷100,000, default: 0]**

This parameter indicates a value forced by the user with a meaning that varies according to the type of generator used. The parameter indicates in particular:

- duration of measurement if the generator used is a DC generator i.e. if the MODE parameter is set with the value DC_ACTIVE. The parameter may have values in the 0.01÷1000 range and the unit of measurement used is ms,
- frequency of the generator if the generator used is an AC generator i.e. if the MODE parameter is set with the value AC_PASSIVE. The parameter may have values in the 0.001÷100 range and the unit of measurement used is KHz.

For the<value> syntax refer to Tab. 3-1. If the value set is 0 the value will be automatically calculated by the function according to the other instruction parameters. If the value is not 0, it will be used for the measurement.

VOLT=*value* **[100÷100000mV, default: 300mV]**

This parameter indicates the voltage value used for measuring capacitance. If the generator used is a voltage generator, this value indicates the programming value of the generator. If the generator used is a current generator, this value, multiplied by 1.5, indicates the maximum value that can be measured with the voltage meter. This multiplication by 1.5 is the result of a decision to calculate a maximum variation of 50% of the observed value compared with the expected value defined with the VAL parameter. If the value set is 0 the value will be calculated by the function. If the value is not 0, it will be used for the measurement. For the<value> syntax refer to Tab. 3-1.

QUALITY=*value* **[1÷100, default: 10]**

This parameter indicates the quality level of the measurement. The parameter is expressed as a number and may have values in the 1÷100 range. The result of a performed measurement is obtained as the arithmetic mean of the number of measurement samples performed. By increasing the value of the QUALITY parameter, the number of samples performed will increase and the quality of measurement will improve. Obviously, if the value of the QUALITY parameter is increased, the time required to perform measurements will also increase.

NOISE=*value* **[0÷100, default: 0]**

This parameter is used to change the delay time before the start of acquisition of the measurement samples. The parameter is expressed as a number and may have values in the 01÷100 range. Usually, after applying stimuli to the component that requires measuring, a delay is necessary before starting the measurements to quit the initial transitory states caused by the presence of parasitic capacitance and inductance on the ACL module and the UUT. If the value of the “NOISE” parameter is increased,

the delay time will increase thus improving the accuracy of the measurement although the time necessary to perform the measurement will also increase.

R_SER =*value* **[0.001÷100,000,000 Ω, default: 0]**
This parameter indicates the resistive value of the series-connected condenser that requires measuring. The parameter is expressed in Ω and may have values in the 0.001÷100,000,000 range. The default value for the R_SER parameter is 0 and means the parameter is not active.

R_PAR =*value* **[0.001÷100,000,000 Ω, default: 0]**
This parameter indicates the resistive value of the parallel-connected condenser that requires measuring. The parameter is expressed in Ω and may have values in the 0.000001÷100,000,000 range. The default value for the C_PAR parameter is 0 and means the parameter is not active.

RES_GUA_CH1=*value* **[1÷100,000,000 Ω, default: 0]**
This parameter indicates the expected resistance value of the surrounding components (Z_{G1}) that if not insulated may absorb some of the current supplied by the generator. The parameter is expressed in Ω and may have values in the 1÷100,000,000 range. The default value for the RESGUA_CH1 parameter is 0 and means the parameter is not active.

RES_GUA_CH2=*value* **[1÷100,000,000 Ω, default: 0]**
This parameter indicates the expected resistance value of the surrounding components (Z_{G2}) that if not insulated may cause current circulation so that the current value measured by the meter is different from the value of the current circulating in Z_X. The parameter is expressed in Ω and may have values in the 1÷100,000,000 range. The default value for the RESGUA_CH2 parameter is 0 and means the parameter is not active.

CAP_GUA_CH1=*value* **[0.001÷1,000,000 µF, default: 0]**
This parameter indicates the expected capacitive value of the surrounding components (Z_{G1}) that if not insulated may absorb some of the current supplied by the generator. The parameter is expressed in µF, it may have values in the 0.000001÷1,000,000 range and must be expressed using the syntax in Tab. 3-1. The default value for the CAPGUA_CH1 parameter is 0 and means the parameter is not active.

CAP_GUA_CH2=*value* **[0.001÷1,000,000 µF, default: 0]**
This parameter indicates the expected capacitive value of the surrounding components (Z_{G2}) that if not insulated may cause current circulation so that the current value measured by the meter is different from the value of the current circulating in Z_X. The parameter is expressed in µF, it may have values in the 0.000001÷1,000,000 range and must be expressed using the syntax in Tab. 3-1. The default value for the CAPGUA_CH2 parameter is 0 and means the parameter is not active.

3.13.3 ~MEAS IND

The ~MEAS IND instruction is used in test programs to measure the inductor values of the components expressed in µH. The measurement can be performed with 2 or 4 wires without guarding or with 3 or 6 wires with guarding.

~MEAS IND **[INTO** *variable***] [VAL=***value***] [CH1=***value***] [CH2=***value***] [CH3=***value***] [CH4=***value***]**
[WIRE=2WIRE|3WIRE|4WIRE|6WIRE]
[TIME/FREQ=*value***] [V=***value***] [QUALITY=***value***][NOISE=***value***]**
[C_SER=*value***] [C_PAR=***value***] [RESGUA_CH1=***value***] [CAPUA_CH1=***value***];**

INTO *variable* — Indicates the variable that the measured value will be inserted in. If no variable is indicated, the measurement results are inserted in the AR variable.

VAL= — **[0.1÷100,000,000** µH**, default: 0** µH
This parameter indicates the expected value of the inductor that requires measuring. The parameter is expressed in µH, it may have values in the 0.1÷100,000,000 range and must be expressed using the syntax in Tab. 3-1. The generator and meter used for the measurement will be programmed according to the function of the expected value indicated with the VAL parameter.

CH1=*value* — **[0÷8,192, default: 0]**
This parameter indicates the channel connected to the positive terminal of the inductor that requires measuring where positive refers to the pole connected to the generator that stimulates the component by injecting current or applying voltage. The parameter is expressed as a whole number and may have values in the 0÷8,192 range. The default value for the CHN1 parameter is 0 and means no channel is used.

CH2=*value* — **[0÷8,192, default: 0]**
This parameter indicates the channel connected to the negative terminal of the component that requires measuring where negative refers to the terminal opposite the positive terminal on the component that requires measuring. The parameter is expressed as a whole number and may have values in the 0÷8,192 range. The default value for the CHN2 parameter is 0 and means no channel is used.

CH3=*value* — **[0÷8,192, default: 0]**
This parameter indicates the channel connected to the positive terminal of the voltage meter that for measurements performed with 4 or 6 wires is connected to the positive pole of the inductor that requires measuring. For measurements performed with 2 and 3 wires, the voltage meter is internally connected to the generator that stimulates the component that requires measuring. The parameter is expressed as a whole number and may have values in the 0÷8,192 range. The default value for the CHN3 parameter is 0 and means no channel is used.

CH4=*value* — **[0÷8,192, default: 0]**
This parameter indicates the channel connected to the negative terminal of the voltage meter that for measurements performed with 4 or 6 wires is connected to the negative pole of the inductor that requires measuring. For measurements performed with 2 and 3 wires, the voltage meter is internally connected to the generator that stimulates the component that requires measuring. The parameter is expressed as a whole number and may have values in the 0÷8,192 range. The default value for the CHN4 parameter is 0 and means no channel is used.

WIRE=*option|value* — **[2WIRE|3WIRE|4WIRE|6WIRE, default: 2WIRE]**
This parameter indicates the number of lines used for measurement. The parameter has four possible values:

2WIRE | 2 — Measurement is performed with two wires, i.e. the meter is connected to the same channels used by the generator.

3WIRE | 3 — Measurement is performed with three wires. Measurement is the same as that with two wires and a third wire is used for guarding.

4WIRE | 4 Measurement is performed with four wires, i.e. the meter is connected to the resistor that requires measuring by two channels that are different from those used by the generator. (Kelvin measurement)

6WIRE | 6 Measurement is performed with six wires. Measurement is the same as that with four wires, a fifth wire is used for guarding and a sixth wire used for guarding sensing.

TIME/FREQ=*value* **[0.01÷100,000, default: 0]**
This parameter indicates a value forced by the user and the frequency of the AC generator used for the test, it may have values in the 0.01÷100,000 and the unit of measure is Hz. For the <value> syntax refer to Tab. 3-1.
If the value set is 0 the value will be automatically calculated by the function according to the other instruction parameters. If the value is not 0, it will be used for the measurement.

VOLT=*value* **[100÷100000mV, default: 300mV]**
This parameter indicates the voltage value used for measuring inductance. If the generator used is a voltage generator, this value indicates the programming value of the generator. If the generator used is a current generator, this value, multiplied by 1.5, indicates the maximum value that can be measured with the voltage meter. This multiplication by 1.5 is the result of a decision to calculate a maximum variation of 50% of the observed value compared with the expected value defined with the VAL parameter. If the value set is 0 the value will be calculated by the function. If the value is not 0, it will be used for the measurement. For the <value> syntax refer to Tab. 3-1.

QUALITY=*value* **[1÷100, default: 10]**
This parameter indicates the quality level of the measurement. The parameter is expressed as a number and may have values in the 1÷100 range. The result of a performed measurement is obtained as the arithmetic mean of the number of measurement samples performed. By increasing the value of the QUALITY parameter, the number of samples performed will increase and the quality of measurement will improve. Obviously, if the value of the QUALITY parameter is increased, the time required to perform measurements will also increase.

NOISE=*value* **[1÷100, default: 1]**
This parameter is used to change the delay time before the start of acquisition of the measurement samples. The parameter is expressed as a number and may have values in the 1÷100 range. Usually, after applying stimuli to the component that requires measuring, a delay is necessary before starting the measurements to quit the initial transitory states caused by the presence of parasitic capacitance and inductance on the ACL module and the UUT. If the value of the “NOISE” parameter is increased, the delay time will increase thus improving the accuracy of the measurement although the time necessary to perform the measurement will also increase.

R_SER =*value* **[0.001÷100,000,000 Ω, default: 0]**
This parameter indicates the resistive value of the series inductor that requires measuring. The parameter is expressed in Ω and may have values in the 0.001÷100,000,000 range. The default value for the C_SER parameter is 0 and means the parameter is not active.

R_PAR =*value* **[0.001÷100,000,000 Ω, default: 0]**
This parameter indicates the resistive value of the parallel inductor that requires measuring. The parameter is expressed in Ω and may have values in the 0.000001÷1,000,000 range. The default value for the R_PAR parameter is 0 and means the parameter is not active.

RES_GUA_CH1=*value* **[1÷100,000,000 Ω, default: 0]**

This parameter indicates the expected resistance value of the surrounding components (Z_{G1}) that if not insulated may absorb some of the current supplied by the generator. The parameter is expressed in Ω and may have values in the 1÷100,000,000 range. The default value for the RESGUA_CH1 parameter is 0 and means the parameter is not active.

CAP_GUA_CH1=*value* **[0.001÷1,000,000 µF, default: 0]**
This parameter indicates the expected capacitive value of the surrounding components (Z_{G1}) that if not insulated may absorb some of the current supplied by the generator. The parameter is expressed in µF, it may have values in the 0.000001÷1,000,000 range and must be expressed using the syntax in Tab. 3-1. The default value for the CAPGUA_CH1 parameter is 0 and means the parameter is not active.

3.13.4 ~MEAS JUN

The ~MEAS JUN instruction is used in test programs to measure the voltage values on the poles of diode, zener diode, led and transistor junctions expressed in Volts. The measurement can be performed with 2 or 4 wires without guarding or with 3 or 6 wires with guarding.

~MEAS JUN **[INTO** *variable***] [CH1=***value***] [CH2=***value***] [CH3=***value***] [CH4=***value***]**
[V=*value***] [WIRE=2WIRE|4WIRE] [TIME =***value***] [CURRENT=***value***]**
[C_PAR=*value***] [R_PAR=***value***] [QUALITY=***value***] [DELAY_MEAS=***value***]**

INTO=variable Indicates the variable that the measured value will be inserted in. If no variable is indicated, the measurement results are inserted in the AR variable.

CH1=*value* **[0÷8,192, default: 0]**
This parameter indicates the channel connected to the positive terminal of the junction that requires measuring where positive refers to the pole connected to the generator that stimulates the component by injecting current or applying voltage. The parameter is expressed as a whole number and may have values in the 0÷8,192 range. The default value for the CHN1 parameter is 0 and means no channel is used.

CH2=*value* **[0÷8,192, default: 0]**
This parameter indicates the channel connected to the negative terminal of the component that requires measuring where negative refers to the terminal opposite the positive terminal on the component that requires measuring. The parameter is expressed as a whole number and may have values in the 0÷8,192 range. The default value for the CHN2 parameter is 0 and means no channel is used.

CH3=*value* **[0÷8,192, default: 0]**
This parameter indicates the channel connected to the positive terminal of the voltage meter that for measurements performed with 4 or 6 wires is connected to the positive pole of the junction that requires measuring. For measurements performed with 2 and 3 wires, the voltage meter is internally connected to the generator that stimulates the component that requires measuring. The parameter is expressed as a whole number and may have values in the 0÷8,192 range. The default value for the CHN3 parameter is 0 and means no channel is used.

CH4=*value* **[0÷8,192, default: 0]**
This parameter indicates the channel connected to the negative terminal of the voltage meter that for measurements performed with 4 or 6 wires is connected to the negative pole of the junction that requires measuring. For measurements performed with 2 and 3 wires, the voltage meter is internally connected to the generator that stimulates the component that requires measuring. The parameter is expressed as a whole number and may have values in the 0÷8,192 range. The default value for the CHN4 parameter is 0 and means no channel is used.

VOLT=*value* **[100÷100000mV, default: 300mV]**
This parameter indicates the expected voltage value on the junction. If the value set is 0 the value will be calculated by the function. If the value is not 0, it will be used for the measurement. For the <value> syntax, refer to Tab. 3-1.

WIRE=*option|value* **[2WIRE|4WIRE, default: 2WIRE]**
This parameter indicates the number of lines used for measurement. The parameter has four possible values:

2WIRE Measurement is performed with two wires, i.e. the meter is connected to the same channels used by the generator.

3WIRE | 3 Three wires measurement. It is the same as the two wires one, with an additional third wire for the guarding.

4WIRE Measurement is performed with four wires, i.e. the meter is connected to the resistor that requires measuring by two channels that are different from those used by the generator. (Kelvin measurement)

6WIRE | 6 Six wires measurement. It is the same as the four wires one, with an additional fifth wire used for the guarding and a sixth wire for the guarding sensing.

TIME/FREQ=*value* **[0.01÷1000ms, default: 0]**
This parameter indicates a value forced by the user for the duration of the measurement. The parameter may have values in the 0,01÷1000 range and the unit of measurement used is ms.
For the <value> syntax, refer to Tab. 3-1. If the value set is 0 the value will be automatically calculated by the function according to the other instruction parameters. If the value is not 0, it will be used for the measurement.

CURRENT=value **[100÷1000mA, default: 0]**
This parameter indicates the current value that will be injected in the junction. The parameter is expressed in mA and may have values in the 0,00005÷500 range. For the <value> syntax, refer to Tab. 3-1. If the value set is 0 the value will be automatically calculated by the function according to the other instruction parameters. If the value is not 0, it will be used for the measurement.

R_PAR =*value* **[0.001÷100,000,000 Ω, default: 0]**
This parameter indicates the resistive value of the parallel-connected junction that requires measuring. The parameter is expressed in Ω and may have values in the 0.000001÷1,000,000 range. The default value for the R_PAR parameter is 0 and means the parameter is not active.

C_PAR =*value* **[0.00000001÷1,000,000 µF**, default: 0**]**
This parameter indicates the capacitive value of the parallel-connected junction that requires measuring. The parameter is expressed in µF and may have values in the 0.000001÷1,000,000 range and must be expressed using the syntax in Tab. 3-1. The default value for the C_PAR parameter is 0 and means the parameter is not active.

QUALITY=*value* **[1÷100, default: 10]**
This parameter indicates the quality level of the measurement. The parameter is expressed as a number and may have values in the 1÷100 range. The result of a performed measurement is obtained as the arithmetic mean of the number of measurement samples performed. By increasing the value of the QUALITY parameter, the number of samples performed will increase and the quality of measurement will improve. Obviously, if the value of the QUALITY parameter is increased, the time required to perform measurements will also increase.
The default value for the QUALITY parameter is 10.

NOISE =*value* **[1÷100, default: 1]**

This parameter is used to change the delay time before the start of acquisition of the measurement samples. The parameter is expressed as a number and may have values in the 1÷100 range. Usually, after applying stimuli to the component that requires measuring, a delay is necessary before starting the measurements to quit the initial transitory states caused by the presence of parasitic capacitance and inductance on the ACL module and the UUT. If the value of the "**NOISE"** parameter is increased, the delay time will increase thus improving the accuracy of the measurement although the time necessary to perform the measurement will also increase.

3.13.5 ~MEAS CONTACT

The ~MEAS CONTACT instruction is used on bed-of-nails systems to check contact between the fixture test channels and the points of the UUT to be tested.
When the instruction is executed, the following operations are performed:

1. All the channels to be checked are connected to a common reference point.
2. Each channel that requires checking is disconnected from the common reference point, stimulated by a current generator and measured with a voltage meter to measure the resistance between the tested channel and the common reference point.
3. If the measured value that corresponds to the impedance between the measured channel and the reference point is lower than a threshold value defined in the instruction activating parameters, there is good contact.
4. If the measured value is higher than the threshold, it means there is not good contact.

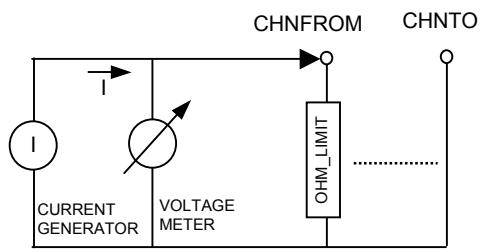

Fig. 3-27 - ACL module: MEAS CONTACT

The syntax of the ~MEAS CONTACT instruction is:

~MEAS CONTACT [**FROM=***value*] [**TO=***value*] [**OHM =***value*] [**TIME =***value*][**VOLT =***value*] [**MODE=***option*]

FROM=*value* **[0÷8,192, default: 0]**
This parameter indicates the first channel of the group of channels on which the physical contact with the UUT must be checked. The parameter is expressed as a whole number and may have values in the 0÷8,192 range. The default value for the FROM parameter is 0 and means no channel is used.

TO=*value* **[0÷8,192, default: 0]**
This parameter indicates the last channel of the group of channels on which the physical contact with the UUT must be checked. The parameter is expressed as a whole number and may have values in the 0÷8,192 range. The default value for the TO parameter is 0 and means no channel is used.

OHM=*value* **[1,000÷100,000,000 Ω, default: 0 Ω]**
This parameter indicates the maximum expected resistive value during the channel contact check. If the measured value is lower than the value defined with the OHM_LIMIT parameter, the contact is considered good and if it is higher, the contact is not good enough. The parameter is expressed in Ω and may have values in the 1,000÷10,000,000 range. If the parameter is not defined or a 0 value is assigned, the resistive value is set to 1,000,000 Ω. The generator and meter used for the measurement will be programmed according to the value of this parameter and the value defined with the VOLT parameter.

TIME=*value* **[0÷1,000ms, default: 0ms]**

This parameter indicates a value forced by the user for the duration of the measurement. The parameter may have values in the 0÷1000 range, the unit of measurement used is ms and must be expressed using the syntax in Tab. 3-1.
If the value set is 0 the value will be automatically calculated by the function according to the other instruction parameters. If the value is not 0, it will be used for the measurement.

VOLT =value **[0.1÷10V, default: 1.2V]**
This parameter indicates the expected voltage value on the contact. The parameter is expressed in Volts and may have values in the 0.1÷10 range.

The generator and meter used for the measurement will be programmed according to the value of this parameter and the value defined with the "OHM" parameter.

MODE=*option* **[0|1, default: 0]**
This parameter indicates the measurement mode, i.e. the channels involved in measurement. The parameter can have two values:

0 The measure will be executed between the channel identified with CHNFROM and all channels included in the CHNFROM+1 – CHNTO interval.
1 The measure will be executed between the channel identified with CHNFROM and the channels identified with CHNTO.

With the current ACL version, the only value handled for MODE, is 0.

3.13.6 ~MEAS SHORT

The ~MEAS SHORT instruction is used on bed-of-nails systems to check if the channels specified in the instruction parameters short-circuit one another.
When the instruction is executed, the following operations are performed:

1. All the channels to be checked are connected to a common reference point.
2. Each channel that requires checking is disconnected from the common reference point, stimulated by a current generator and measured with a voltage meter to measure the resistance between the tested channel and the common reference point.
3. If the measured value is higher than a threshold value defined in the instruction activating parameters, the process continues on the next channel; if the impedance value is lower than that stated, the process continues but the channel in question is stored internally.
4. The measurements indicated in point 2 are performed for the channels stored in point 3 and by comparing the measured values, the circuits that short circuit one another can be identified.

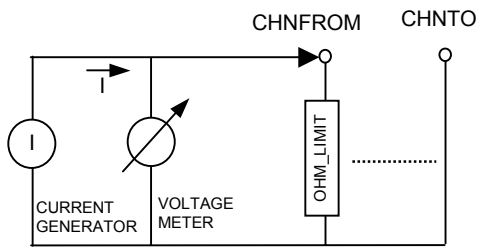

Fig. 3-28 - ACL module: MEAS SHORT

The syntax of the ~MEAS SHORT instruction is:

~MEAS SHORT [**FROM=***value*] [**TO=***value*] [**OHM=***value*] [**TIME =***value*] [**VOLT=***value*] [**MODE=***option*]

FROM=*value* **[0÷8,192, default: 0]**
This parameter indicates the first channel of the group of channels on which the presence of short-circuits must be checked. The parameter is expressed as a whole number and may have values in the 0÷8,192 range. The default value for the CHN1 parameter is 0 and means no channel is used.

TO=*value* **[0÷8,192, default: 0]**
This parameter indicates the last channel of the group of channels on which the presence of short-circuits must be checked. The parameter is expressed as a whole number and may have values in the 0÷8,192 range. The default value for the CHN2 parameter is 0 and means no channel is used.

OHM=*value* **[3÷1,000 Ω, default: 0 Ω]**
This parameter indicates the minimum expected resistive value during the channel short circuit check. If the measured value is higher than the value defined with the OHM parameter, the channel is not shorted. For lower values, the channel is shorted. The parameter is expressed in Ω and may have values in the 3÷1000 range. The generator and meter used for the measurement will be programmed according to the value of this parameter and the value defined with the VOLT parameter.
The default value for the OHM parameter is 6.

TIME=*value* **[0÷1,000ms, default: 0ms]**
This parameter indicates a value forced by the user for the duration of the measurement. The parameter may have values in the 0÷1000 range, the unit of measurement used is ms and must be expressed using the syntax in Tab. 3-1.
If the value set is 0 the value will be automatically calculated by the function according to the other instruction parameters. If the value is not 0, it will be used for the measurement.

VOLT=*value* **[0.1÷10V, default: 0.6V]**
This parameter indicates the expected voltage value on the contact. The parameter is expressed in Volts, its may have values in the 0.1÷10 range and must be expressed using the syntax in Tab. 3-1. The default value for the VOLT parameter is 0.6.
The generator and meter used for the measurement will be programmed according to the value of this parameter and the value defined with the OHM_LIMIT parameter.

MODE=*option* **[0|1, default: 0]**
This parameter indicates the measurement mode, i.e. the channels involved in measurement. The parameter has two possible values:

0	The measurement is performed between the CHNFROM channel and all the channels in the CHNFROM+1 and CHNTO range.
1	The measurement is only performed between the CHNFROM channel and the CHNTO channel

3.13.7 ~SET GUARD

The ~SET GUARD instruction is used to define the guarding points and the sense guarding point.
The guarding points are points that must be kept at the same potential as the guarding circuit whereas the sense guarding point is the remote reaction point of the guarding circuit when internal sensing is not used.

The syntax of the ~SET GUARD instruction is:

~SET GUARD [ARRAY GUARDING POINT]

The GUARDING POINT parameter indicates an array of values containing this information:

GUARDING POINT [0]: This contains a number that indicates the number of guarding points. If the value is 0, there are no guarding points.

GUARDING POINT [1]: This contains the channel number connected to the sense guarding point. If the number of guarding points is 1, the same channel number must be written in GUARDING POINT[1] and GUARDING POINT[2].

GUARDING POINT [2 to n]: The values contained after element 2 contain the number of channels connected to the points that must be maintained at the same potential as the guarding circuit.

3.13.8 ~SET DISCAP

The ~SET DISCAP instruction is used to discharge any capacitance between two channels. The instruction brings the potential of two channels to the same value using a discharge current defined with an instruction parameter.

~SET DISCAP **[CH1=***value*],**[CH2=***value***],[CURRENT=***value***], [DRC_OFF|DRC_ON];**

CH1=*value* **[0÷8,192, default: 0]**
This parameter indicates the channel connected to a pole of the capacitance that requires discharging. The parameter is expressed as a whole number and may have values in the 0÷8,192 range. The default value for the CHN1 parameter is 0 and means no channel is used.

CH2=*value* **[0÷8,192, default: 0]**
This parameter indicates the channel connected to another pole of the capacitance that requires discharging. The parameter is expressed as a whole number and may have values in the 0÷8,192 range. The default value for the CHN2 parameter is 0 and means no channel is used.

CURRENT=value [0.1÷100mA**, default: 20mA]**
This parameter indicates the value of the discharge current. The parameter is expressed in mA and may have values in the 0.1÷100 range must be expressed using the syntax in Tab. 3-1.

DRC_OFF|DRC_ON[6] **[DRC_OFF|DRC_ON, default: DRC_OFF]**
This parameter indicates if the DRC driver must be disabled after the instruction is executed. The DRC driver is used for capacitance discharging. If the ~SET DISCAP function is executed several times, the parameter does not disable the DRC at the end of the instruction so that it is left already programmed for the next execution. The parameter has two possible values:

DRC_OFF This means that the DRC generator is disabled at the end of the instruction.

DRC_ON This means that the DRC generator is not disabled at the end of the instruction.

The default value is DRC OFF.

[6] For this parameter the syntax is:
< *instrument_parameters* >:[{**PARAMETER**},{**PARAMETER**=<*value*>},{**PARAMETER**=<*option*> }…]

3.13.9 ~MEAS SCAMPO

The ~MEAS SCAMPO instruction is used to define the characteristics of the measurements performed with the capacitive sensors that are used for detecting open or incorrectly soldered pins on a component. The capacitive method consists in measuring, using the existing capacitance between a metal plate placed on the integrated circuit case and the inside of the integrated circuit itself, the amplitude of an AC signal injected on a traverse connected to a component pin. If the component pin is not properly connected (faulty soldering) to the traverse that the AC signal is injected on, the amplitude of the measured signal will be different from the amplitude measured on a board with a proper connection. The measurement results will be inserted in the acquisition buffer of the voltage meter and will be available using the ~MEAS IMM instruction that is executed to make the acquired values available to the test program.

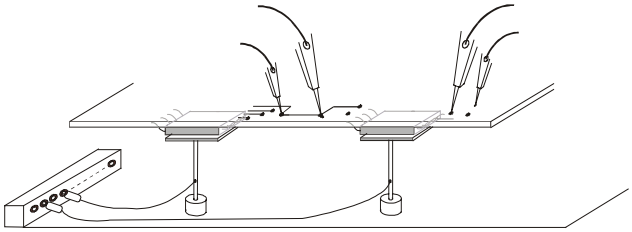

Fig. 3-29 - ACL module: Capacitive Senses measure

~MEAS SCAMPO [INTO=*variable*] [CHN=*value*],[N_SENSORE=*value*],
[MODE= RMS_LOW|RMS_HIG|AC_LOW|AC_HIG],
[VOLT=*value*] | [FREQ=*value*],|[TIME=*value*];

INTO=variable — Indicates the variable that the measured value will be inserted in. If no variable is indicated, the measurement results are inserted in the AR variable.

CH=*value* — **[0÷8.192, default: 0]**
This parameter indicates the channel connected to the component pin that needs to be checked. The parameter is expressed as a whole number and may have values in the 0÷8,192 range. The default value for the CHN1 parameter is 0 and means no channel is used.

SENSOR=*value* — **[0÷64, default: 0]**
This parameter indicates the number of the active sensor used for measurement. The parameter is expressed as a whole number and may have values in the 0÷64 range. The default value for the N_SENSORE parameter is 0 and it means “the sensor is the mobile one present on the Flying Probe systems”.

MODE=*option*|*value* — **[RMS_LOW|RMS_HIG|AC_LOW|AC_HIG, default: RMS_HIG]**
This parameter indicates the measuring mode and scale used to measure the sensor signal. The parameter may have the following values:

- **RMS_LOW | 0** — The measurement instrument is programmed for an RMS measurement with a low full scale value.
- **RMS_HIG | 1** — The measurement instrument is programmed for an RMS measurement with a high full scale value.
- **AC_LOW | 2** — The measurement instrument is programmed for an AC peak to peak measurement with a low full scale value.
- **AC_HIG | 3** — The measurement instrument is programmed for an AC peak to peak measurement with a high full scale value.

VOLT=*value* — **[0÷10V, default: 0,3V]**
This parameter indicates the voltage value programmed for the stimulus signal. The parameter is expressed in V and may have values in the0÷10 range.

FREQ=*value* — **[0÷1,000,000Hz, default: 50,000Hz]**
This parameter indicates the frequency value programmed for the stimulus signal. The parameter is expressed in Hz and may have values in the 0÷1,000,000range.

TIME=*value* — **[0÷1sec, default: 0.01sec]**
This parameter indicates the duration programmed for measurement. The parameter is expressed in seconds and may have values in the 0÷1 range.

Section 4

4 Appendix A: List of instructions and electrical features of the main system resources

This section lists all the software instructions and indicates the two types of syntax for the instruction parameters.

The table in Appendix A indicates the two types of syntax but it is important to bear in mind that the use of the **PARAMETER**=<*value*> syntax instead of the **PARAMETER**=<*option*> syntax reduces test program readability.

The last column in the table indicates the default value for each parameter. The default value is the value of the parameter when the parameter is omitted from the instruction arguments in the test program.

After the instructions list, we have the electrical features of the main system resources present on the ACL module or which can be managed by the ACL module.

- General purpose resources present on the ACL module.
- Resources present on the IOV5LOAD module.
- Analogical channels which can be present on the testing system.

Tab. 4-1- ACL module: Instructions, syntax and default value

INSTRUCTION	PARAMETERS		
	PARAMETER=<*value*>	PARAMETER=<*option*>	DEFAULT
~SET DRA	V=<*value*>		0V
	I=<*value*>		0,01A
	OFSET=<*value*>		0V/A
	RANGE=0|1|2|3|4|5|6|7	RANGE=AUTO|[1V|50uA]|10V|500uA]|5mA| 50mA|500MA|500NA|5UA	0|AUTO
	MODE=0|1	MODE=V|I	0|V
	VNEG=<*value*>		0V
	FREQ=<*value*>		1.000Hz
	TIME=<*value*>		0.001sec
	WAVE=0|1|2|3|4|5|6|7|8|9|10|11| 12|13|14|15|16|17|18|19|20|21|22 |23	WAVE=DC|SINE|TRI|RECT|ARB1|ARB2|ARB3| ARB4|ARB5|ARB6|ARB7|ARB8|ARB9|ARB10| VECT1|VECT2|VECT3|VECT4|VECT5|VECT6| VECT7|VECT8|VECT9|VECT10	0|DC
	START=0|1|2|3|4|5|6|7|8	START=IMMEDIATE|CNT_START|CNT_STOP| CNT_COMP|HW1|HW2|SW1|CLEAR| STOP_EVO	0|IMMEDIATE
	N_SAMPLE=<*value*>		1.000
	ADDR=<*value*>		0
	DELAY_TRIG=<*value*>		0sec
	EVOLUTION=<*value*>	EVOLUTION=CONTINUE|<*value*>	1
	COUPLING=0|1	COUPLING=DC|AC	0|DC
	OUT=0|1|2|8	OUT=NONE|L1|L2|L8	0|NONE
	DOMAIN=0|1|2	DOMAIN=DRA|PC|ALL	0|DRA
	TIME_RELE=0|1	TIME-RELE=ON|OFF	0|ON
~SET DRB	V=<*value*>		0V
	I=<*value*>		0,01A
	OFSET=<*value*>		0V
	RANGE=0|1|2	RANGE=AUTO|1V|10V	0|AUTO
	MODE=0|1|2	MODE=V|GUARD|FOLLOWER	0|V
	SENSE=0|4|5	SENSE=INT|L4|L5	0|INT
	FREQ=<*value*>		1.000Hz
	TIME=<*value*>		0.001sec
	WAVE=0|1|2|3|4|5|6|7|8|9|10|11| 12|13|14|15|16|17|18|19|20|21|22 |23	WAVE=DC|SINE|TRI|RECT|ARB1|ARB2|ARB3| ARB4|ARB5|ARB6|ARB7|ARB8|ARB9|ARB10 |VECT1|VECT2|VECT3|VECT4|VECT5|VECT6| VECT7|VECT8|VECT9|VECT10	0|DC
	START=0|1|2|3|4|5|6|7|8	START=IMMEDIATE|CNT_START|CNT_STOP| CNT_COMP|HW1|HW2|SW1|CLEAR| STOP_EVO	0|IMMEDIATE
	N_SAMPLE=<*value*>		1.000
	ADDR=<*value*>		0
	DELAY_TRIG=<*value*>		0sec
	EVOLUTION=<*value*>	EVOLUTION=CONTINUE|<*value*>	1
	IN=0|2|4|6|8	IN=DAC|L2|L4|L6|L8	0|DAC
	OUT=0|1|2|3|4|5|7|9	OUT=NONE|L1|L2|L3|L4|L5|L7|L4HF	0|NONE
	DOMAIN=0|1|2	DOMAIN=DRB|PC|ALL	0|DRB
	TIME_RELE=0|1	TIME-RELE=ON|OFF	0|ON
~SET DRC	V=<*value*> [-100÷+100V]		0V
	I=<*value*> [-0,1÷+0,1A]		0.01A
	OUT=0|1|2|4|6	OUT=NONE|L1|L2|L4|L6	0|NONE
	START=0|1	START=IMMEDIATE|SW1	0|IMMEDIATE

INSTRUCTION	PARAMETERS		
	PARAMETER=<*value*>	PARAMETER=<*option*>	DEFAULT
~SET IMM		MEAS_V=[BUFF|AUTO]| DC|AC|DV_DT|RMS|FFT|ONE_SHOT|NONE	BUFF|AUTO
		MEAS_I=[BUFF|AUTO]| DC|AC|DI_DT|RMS|FFT|ONE_SHOT|NONE	BUFF|AUTO
	RANGE_V=0|1|2|3|4|5|6|7|8|9|10|11|12	RANGE_V=NONE|200MVG|500MVG|1VG|2VG|5VG|10VG|2V|5V|10V|20V|50V|100V	6|10VG
	RANGE_I=0X50|0X00|0X01|0X02|0X10|0X11|0X12|0X20|0X21|0X22|0X30|0X31|0X32|0X40|0X41|0X42|0X43|0X44|0X45|0X00|0X01|0X02|0X03|0X04|0X05|0X13|0X14|0X15|0X23|0X24|0X25|0X33|0X34|0X35| [0X70|0X71|0X72|0X80|0X81|0X82|0X90|0X91|0X92|0XA0|0XA1|0XA2|0XB0|0XB1|0XB2|0XC0|0XC1|0XC2|0XD0|0XD1|0XD2|0XE0]| [0X60|0X61]	RANGE_I=NONE|500MADC|250MADC|100MADC|50MADC|25MADC|10MADC|5MADC|2P5MADC|1MADC|500UADC|250UADC|100UADC|50UADC|25UADC|10UADC|5UADC|2P5UADC|1UADC|500MAAC|250MAAC|100MAAC|50MAAC|25MAAC|10MAAC|5MAAC|2P5MAAC|1MAAC|500UAAC|250UAAC|100UAAC|50UAAC|25UAAC|10UAAC| [5A|2P5A|1A|500MA|250MA|100MA|50MA|25MA 10MA|5MA|2P5MA|1MA|500UA|250UA|100UA|50UA|25UA|10UA|5UA|2P5UA|1UA|60MV] |[25A|10A]	0X50|NONE
	RANGE_V2=0X50|0X30|0X31|0X32|0X40|0X41|0X42|0X43|0X44|0X45|0X23|0X24|0X25 0X33|0X34|0X35	RANGE_V2=NONE|100VDC|50VDC|20VDC|10VDC|5VDC|2VDC|1VDC|500MVDC|200MVDC|100VAC|50VAC|20VAC|10VAC|5VAC|2VAC	0X50|NONE
	MODE=0|16|4	MODE=NORMAL|DEBUG|PROCESS]	0|NORMAL
		INP_MEM=MEMORY|CHANNEL|ADC|INPUT	ADC
	N_SAMPLE=value		1.000
	FREQ=*value*		10.000.000Hz
	ADDR=*value*		0
	START=0|1|2|3|4|5|6|7	START=IMMEDIATE|CNT_START|CNT_STOP|CNT_COMP|HW1|HW2|SW1|DISABLE	0|IMMEDIATE
	TRIG_OUT=0|1|2	TRIG_OUT=NONE|SW1|SW2	0|NONE
	DELAY_TRIG=*value*		0sec
	EVOLUTION=*value*		1
	INP_VPOS=0|1|2|4|6|9|10|11|12|13|14	INP_VPOS=OPEN|L1|L2|L4|L6|GND|MONITOR|IDRA|IDRB|IDRC|TEMP	0|OPEN
	INP_VNEG=0|1|2|3|4|5|7|9	INP_VNEG=OPEN|L1|L2|L3|L4|L5|L7|GND	0|OPEN
	INP_I_V2=0|1|[2|2]|3|4|6|8|11|12	INP_I_V2=NONE|L1_I|[L1_V|L2-AMP]|L3_AMP|L4_AMP|L6_AMP|L8_AMP|POD|CON	0|OPEN
	SENSE_I=0|1	SENSE_I=INTERNAL|L5	0|INTERNAL
	REF_I=0|[3|3]|[7|7]|2|3|4|5|7	REF_I=GND|[L3|L3-AMP]|[L7|L7_AMP]|L4_AMP|L5_AMP	0|GND
	FILTER=0|1|2|3|4|5|6|7|8|9|10|11|12|13	FILTER=NONE|PB_BW|PA_BW|PB_C1|PA_C2|MM|PB_FH|PA_FH|PBD_FH|BR_FH|PB_FB|PA_FB|PBD_FB|BR_FB	0|NONE
	ORDER=*value*		10
	FT1=*value*		0Hz
	FT2=*value*		0Hz
	DOMAIN=0|1|2	DOMAIN=IMM|PC|ALL|	0|IMM

INSTRUCTION	PARAMETERS		
	PARAMETER=<*value*>	PARAMETER=<*option*>	DEFAULT
~MEAS IMM		INTO=*variable*	AR
		N_SAMPLE=*value*	1
		ADDR=*value*	0
	MEAS=[0|0]|1|2|3|4|5|6|7|8|9|10|11|12|13|14|15|16|17|18|19|20|21|22|23|24|25|200|201|202|203|204|205|206|207|208	MEAS=[IST_V|IST_V2]|MAX_V|MIN_V|AVERAGE_V|RMS_V|P_V|PP_V|OFFSET_V|DV_DT|MAX_I|MIN_I|AVERAGE_I|RMS_I|P_I|PP_I|OFFSET_I|DI_DT|MAX_V2|MIN_V2|AVERAGE_V2|RMS_V2|P_V2|PP_V2|OFFSET_V2|DV2_DT|PHASE_V2|MODULE_V2|BUFFER_V|BUFFER_I|BUFFER_V2|MODULE_V|PHASE_V|MODULE_I|PHASE_I|VECT_VF|VECT_IF|REL_DRA|REL_DRB|REL_DRC|REL_MESVP|REL_MESVM|REL_MESI|REL_MESI_REF|REL_GND|REL_PULL	0|IST_I
~SET SHUNT		VAL_POD=*value*	1
		VAL_CON=*value*	1
		VAL_LINE=*value*	1
~SET SCOUNTER	VAL=<value>		0
	LEVEL_A=<*value*> [-100÷+100V]		0V
	LEVEL_B=<*value*> [-100÷+100V]		0V
	SLOPE_A=0|1	SLOPE_A=NEG|POS	1|POS
	SLOPE_B=0|1	SLOPE_B=NEG|POS	1|POS
	DELAY_TRIG=<*value*>		0sec
	[ARM/START]=0|4|5|6|7|8	[ARM/START]=IMMEDIATE|HW1|HW2|SW1|DISABLE|DISARM	0|IMMEDIATE
	GATE=<*value*>		0sec
	AVERAGE=<*value*>		1
	MODE=0|1|2|3|4|5|6|7	MODE=COUNT|COUNT_B|COUNT_GATE|FREQ|TINT_A|TINT_AB|PERIOD	0|COUNT
	HISTERESIS=0|1|2|3	HISTERESYS=AUTO|10US|300NS|10NS	0|AUTO
	RANGE_A=1|2|3	RANGE=10V|100V|10V_50	1|10V
	INP_A=0|4|6	INP_A=NONE|L4|L6	0|NONE
	RANGE_B=1|2|3	RANGE=10V|100V|10V_50	1|10V
	INP_B=0|2|8	INP_B=NONE|L2|L8	1|10V
	TRIG_OUT=0|1|2	TRIG_OUT=NONE|SW1|SW2	0|NONE
	DOMAIN=0|1|2	DOMAIN=SCOUNTER|PC|ALL	0|SCOUNTER
~MEAS SCOUNTER		INTO=*variable*	AR
~SET MONITOR	OUT=0|1|2|3|4|5|6|7|8|9|10|11|12|13\14|15|16|17|18|19|20|21|22|23	OUT=IDRA|LPDRA|IDRB|LDRB|IDRC|LDRC|LNDRA|TEMP|REFP|REFN|TH_START|TH_STOP|VOL|VOH|THL|THH|VDRB|VDRC|VDRA|SDRA|SBRB|SDRC|GDRA|GDRB	0|IDRA
~SET AGND	OUT=0XFF|0XFFE|0XFD|0XFB|0XF7|0XEF|0XDF|0XBF|0X7F|	OUT=OPEN|L1|L2|L3|L4|L5|L6|L7|L8	0XFF|OPEN
	SOURCE=0|1	SOURCE=GND|GEN_GND	0|GND
	TIME_RELE=0|1	TIME-RELE=ON|OFF	0|ON
~SET PULL	VAL=0|1|2|3|4|5	VAL=NONE|100|[1000|1K]|[10000|10K]|[100000|100K]|[1000000|1MEG]	0|NONE
	SOURCE=0|1|2|3	SOURCE=NONE|L2|GND|VCC	0|NONE
	TIME_RELE=0|1	TIME_RELE=ON|OFF	O|ON

INSTRUCTION	PARAMETERS		
	PARAMETER=<*value*>	PARAMETER=<*option*>	DEFAULT
~SET LINE	OUT=0|1|2|3	OUT=OPEN|1_4_CLOSE|5_8_CLOSE|CLOSE	0|OPEN
	MODE=0|1	MODE=8L|4L	1|4L
	INT_LINEE=0|1|2|3	INT_LINEE=MEAS_I|L1-ALL|L5_ALL|ALL	3|ALL
	TIME_RELE=0|1	TIME_RELE=ON|OFF	0|ON
~SET LINE_EXT	OUT=0XFF|0XFFE| 0XFD|0XFB|0XF7|0XEF|0XDF|0XBF|0X7F|	OUT=OPEN|L1|L2|L3|L4|L5|L6|L7|L8	0XFF|OPEN
	TIME_RELE=0|1	TIME_RELE=ON|OFF	0|ON
~SET WR_HW	TYPE=0|1|2|3|	TYPE=OC|RT|JT|FX	0|OC
	DATA==<value>		0
~MEAS RD_HW		INTO=*variable*	AR
	TYPE=1|2|3|	TYPE=RT|JT|FX	1|RT
~SET CHANNEL	CHN=<value>		0
	LINEE=<value>		0
	MODE=0|1|2|4|5|6|7|8	MODE=4L_INCO|4L_INCC|4L_IMM|8L_INCO| 8L_INCC|8L_IMM|2L_INCO|2L_INCC|2L_IMM|	1|4L_IMM
	BLINEE=0|1	BLINEE=CLOSE|OPEN	0|CLOSE
	ALL=0|1	ALL=ON|OFF	1|OFF
	TIME_RELE=0|1	TIME_RELE=ON|OFF	O|ON
~SET POWERSCAN	BOARD=<value>		0
	MODE=<value>		0
	SIGNAL=<value>		0
	S20BDLINE=<value>		0
	PWRBDLINE=<value>		1
	CROSSLINE=<value>		1
	MERGEPWRS20LINE=<value>		0
	OEB=0|1	OEB=ON|OFF	0|ON
~SET IOV5LOAD	BOARD=<value>		0
	OEB=0|1	OEB=ON|OFF	0|ON
~SET IOV5LOAD_OUT_A	OUT=<value>		0
	STATUS=1|2|4|10	STATUS=SPARE|GND|PULLDOWN|VBAT	1|SPARE
~SET IOV5LOAD_OUT_B	OUT=<value>		0
	STATUS=1|2|5|10	STATUS= PULLDOWN|GND|PULLUP|VBAT	1|PULLDOWN
~SET IOV5LOAD_OUT_LOAD	LOAD=<value>		0
	OHM=<value>		1.048.575
	ON_OFF=0|1	ON_OFF=OFF|ON	0|OFF
~MEAS IOV5LOAD_OUT_LOAD		INTO=*variable*	AR
	LOAD=<value>		0
~SET IOV5LOAD_OUT_ANA	ANALOG=<value>		0
	V=<value>		0
~SET IOV5LOAD_OUT_OPTO	OUT=<value>		0
	STATUS=<value>	STATUS=OFF|ON>	1|OFF

INSTRUCTION	PARAMETERS		
	PARAMETER=<*value*>	PARAMETER=<*option*>	DEFAULT
~SET LOGIC_LEVEL	IH=<value>		2,4V
	IL=<value>		0V
	OH=<value>		1,2V
	OL=<value>		0,8V
~SET LOGIC_MODE	INP_CH1=0|1|2|3	INP_CH1=DSP|RAM|CLK_IMM|JTAG	0|DSP
	INP_CH2=0|1|2|3	INP_CH1=DSP|RAM|CLK_PLL|JTAG	0|DSP
	INP_CH3=0|1|2|3	INP_CH1=DSP|RAM|CLK_IMM|JTAG	0|DSP
	INP_CH4=0|1|2|3	INP_CH1=DSP|RAM|CLK_PLL|JTAG	0|DSP
	OUT_CH1=0|1	OUT_CH1=NONE|L1	0|NONE
	OUT_CH2=0|2	OUT_CH1=NONE|L2	0|NONE
	OUT_CH3=0|3|5	OUT_CH1=NONE|L3|L5	0|NONE
	OUT_CH4=0|4|8	OUT_CH1=NONE|L4|L8	0|NONE
	PLL_FREQ=<value>		500.000Hz
	N_STEP=<value>		0
	PERIOD=<value>		0,0000016sec
~SET LOGIC	CHi=0|1|4|5|2|3|6	CHi=IL|IH|ML|MH|OL|OH|OM	0|IL
	BURST=0|1|3	BURST=OFF|ON|SW1	0|OFF
~MEAS LOGIC		INTO=*variable*	AR
~SET FLASH	DATATOSET=0|1|2|3|4|5|6|7|8|9|10|11|12|13|14|15|16|17|18|19|20|21|22|23	DATATOSET=TARAT|SINE|TRI|RECT|ARB1|ARB2|ARB3|ARB4|ARB5|ARB6|ARB7|ARB8|ARB9|ARB10|VECT1|VECT2|VECT3|VECT4|VECT5|VECT6|VECT7|VECT8|VECT9|VECT10	0|TARAT
	OFFSET=<value>		0
	NSAMPLE=<value>		0x8000
	CONVERSION=0|1		0
	DATA=<value>		0
~GET FLASH		INTO=*variable*	0|TARAT
	DATATOGET=0|1|2|3|4|5|6|7|8|9|10|11|12|13|14|15|16|17|18|19|20|21|22|23	DATATOGET=TARAT|SINE|TRI|RECT|ARB1|ARB2|ARB3|ARB4|ARB5|ARB6|ARB7|ARB8|ARB9|ARB10|VECT1|VECT2|VECT3|VECT4|VECT5|VECT6|VECT7|VECT8|VECT9|VECT10	0
	ADDR=<value>		0
	NSAMPLE=<value>		0x8000
~SET RAM_EXT		NOMEDISP=ACLAM|NOMEi	ACLAM
	STARTADDR=<value>		0
	NDATA=<value>		65.535
	DATA=<value>		0
	TYPE=0|1	TYPE=INT|FLOAT	0|INT
~GET RAM_EXT		INTO=*variable*	ACLAM
	>	NOMEDISP=ACLAM|NOMEi	ACLAM
	STARTADDR=<value>		0
	NDATA=<value>		65.535
	SIZE=0|1|2	SIZE=S32|S24|S16	0|S32
	TYPE=0|1	TYPE=INT|FLOAT	0|INT

INSTRUCTION	PARAMETERS		
	PARAMETER=<*value*>	PARAMETER=<*option*>	DEFAULT
~MEAS RES		INTO=*variable*	AR
	VAL=<value>		1.000
	CH1=<value>		0
	CH2=<value>		0
	CH3=<value>		0
	CH4=<value>		0
	MODE=0|1|2	MODE=DC_ACTIVE|DC_PASSIVE|AC_PASSIVE	0|DC_ACTIVE
	WIRE=2|3|4|6	WIRE=2WIRE|3WIRE|4WIRE|6WIRE	2|2WIRW
	TIME=<value>		0
	VOLT=<value>		0
	QUALITY=<value>		10
	NOISE=<value>		0
	C_SER=<value>		0
	C_PAR=<value>		0
	L_SER=<value>		0
	L_PAR=<value>		0
	RES_GUA_CH1=<value>		0
	RES_GUA_CH2=<value>		0
	CAP_GUA_CH1=<value>		0
	CAP_GUA_CH2=<value>		0

~MEAS CAP		INTO=*variable*	AR
	VAL=<value>		1000U
	CH1=<value>		0
	CH2=<value>		0
	CH3=<value>		0
	CH4=<value>		0
	MODE=0|2	MODE=DC_ACTIVE|AC_PASSIVE	0|DC_ATTIVE
	WIRE=2|3|4|6	WIRE=2WIRE|3WIRE|4WIRE|6WIRE	2|2WIRE
	TIME=<value>		0
	VOLT=<value>		300M
	QUALITY=<value>		10
	NOISE=<value>		0
	R_SER=<value>		0
	R_PAR=<value>		0
	RES_GUA_CH1=<value>		0
	RES_GUA_CH2=<value>		0
	CAP_GUA_CH1=<value>		0
	CAP_GUA_CH2=<value>		0

INSTRUCTION	PARAMETERS		
	PARAMETER=<*value*>	PARAMETER=<*option*>	DEFAULT
~MEAS IND		INTO=*variable*	AR
	VAL=<value>		1.000
	CH1=<value>		0
	CH2=<value>		0
	CH3=<value>		0
	CH4=<value>		0
	WIRE=2|3|4|6	WIRE=2WIRE|3WIRE|4WIRE|6WIRE	2|2WIRE
	TIME=<value>		0
	VOLT=<value>		300M
	QUALITY=<value>		10
	NOISE=<value>		1
	R_SER=<value>		0
	R_PAR=<value>		0
	RES_GUA_CH1=<value>		0
	CAP_GUA_CH1=<value>		0
~MEAS JUN		INTO=*variable*	AR
	CH1=<value>		0
	CH2=<value>		0
	CH3=<value>		0
	CH4=<value>		0
	VOLT=<value>		0
	WIRE=2|3|4|6	WIRE=2WIRE|4WIRE	2|2WIRE
	TIME=<value>		0
	CURRENT=<value>		0
	C_PAR=<value>		0
	R_PAR=<value>		0
	QUALITY=<value>		10
	NOISE=<value>		1
~MEAS CONTACT	FROM=<value>		0
	TO=<value>		0
	OHM=<value>		1.000.000
	TIME=<value>		0
	VOLT=<value>		1,2V
	MODE=0|1		0
~MEAS SHORT	FROM=<value>		0
	TO=<value>		0
	OHM=<value>		6
	TIME=<value>		0
	VOLT=<value>		0,6V0
	MODE=0|1		0
~SET GUA_POINT	Array (min. 3 element)i		

INSTRUCTION	PARAMETERS		
	PARAMETER=<*value*>	PARAMETER=<*option*>	DEFAULT
~SET DISCAP	CH1=<value>		0
	CH2=<value>		0
	CURRENT=<value>		20
		DRC_OFF|DRC_ON	DRC_OFF
	VOLT=<value>		0
	MODE=<value>		0
~MEAS SCAMPO		INTO=*variable*	AR
	CHN=<value>		0
	SENSOR=<value		0
	MODE=0|1|2|3	MODE=RMS_LOW|RMS_HIG|AC_LOW|AC_HIG	2|RMS_HIG
	VOLT=<value>		0,3
	FREQ=<value>		50.000
	TIME=<value>		0,01

ACL DSP MODULE RESOURCES: main electric characteristics

	Output signals OC0÷OC7	Output signals RTOIS0÷ RTOIS3	Output signals JTOIS0÷ JTOIS3	Output signals FXO0÷FXO3	Input signals RTIIS0÷ RTIIS3	Input signals JTIS0÷ JTIS3	Input signals FXO0÷FXO3
Max current	3mA	10mA	5mA	3mA	5mA	5mA	5mA
Max frequency	10KHz	2MHz	2MHz	10KHz	2MHz	2MHz	10KHz

IOV5LOAD MODULE RESOURCES: main electric characteristics

	Output signals OUT_A1÷ OUT_A288	Output signals OUT_B1÷ OUT_B80	Output signals OUT_ANA1÷ OUT_ANA64	Output signals OUT_OPTO1÷ OUT_OPTO128	Programmable LOAD OUT_LOAD1÷ OUT_LOAD80
Max current	200mA	200mA	50mA	100mA	5mA
Max voltage	30V	30V	±10V	-	-
Max resistance	-	-	-	-	1KΩ

SYSTEM CHANNELS: main electric characteristics

	S64 Board Lines	P32 Board Lines	SCAFP Board Lines	F40 Board Lines	F40 Lines from system bus	EXL Board Lines	EXL Lines from system bus	HRELE Signal Board Lines	HRELE Power Board Lines
Max current	1A	1A	1A	100mA	1A	3A	500mA	3A	20A
Max voltage	100V	100V	250V	15V	100V	500V	100V	48V	48V
Max power	10W	10W	10W	1W	10W	90W	10W	90W	600W
Max switching current	-	-	-	-	-	-	-	3A@28V	20A@28V